Thule VeloCompact
4th Bike Adapter 9261

For VeloCompact 926/927

› Instructions



THULE.COM

= Max 15 kg

= 2,8 kg

926101

C.20151001

501-8108-01

Bring your life

thule.com

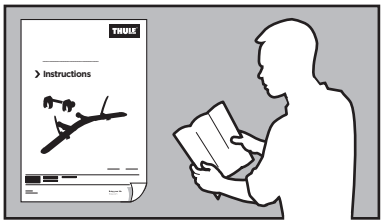
THULE
Instructions

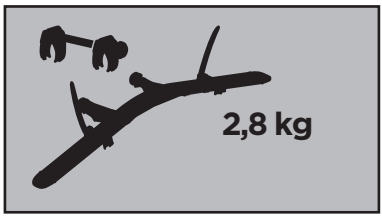
2,8 kg

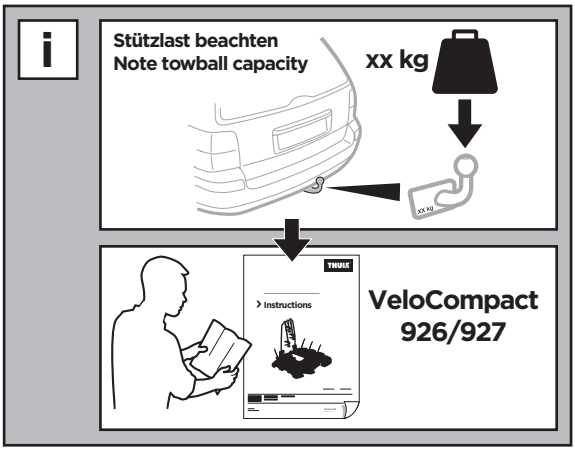
i
Stützlast beachten
Note towball capacity
xx kg
XX kg
THULE
Instructions
VeloCompact
926/927

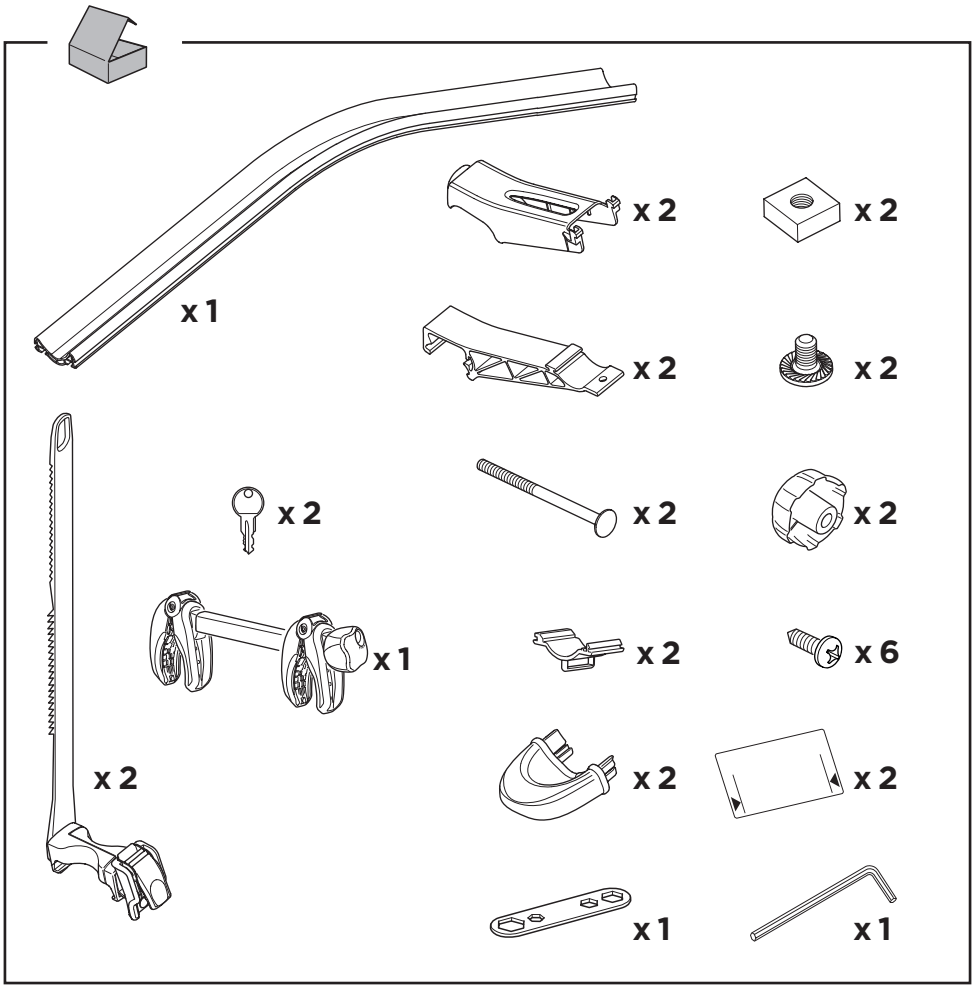
x 1
x 2
x 2
x 2
x 2
x 2
x 2
x 2
x 1
x 2
x 2
x 6
x 2
x 2
x 1
x 1

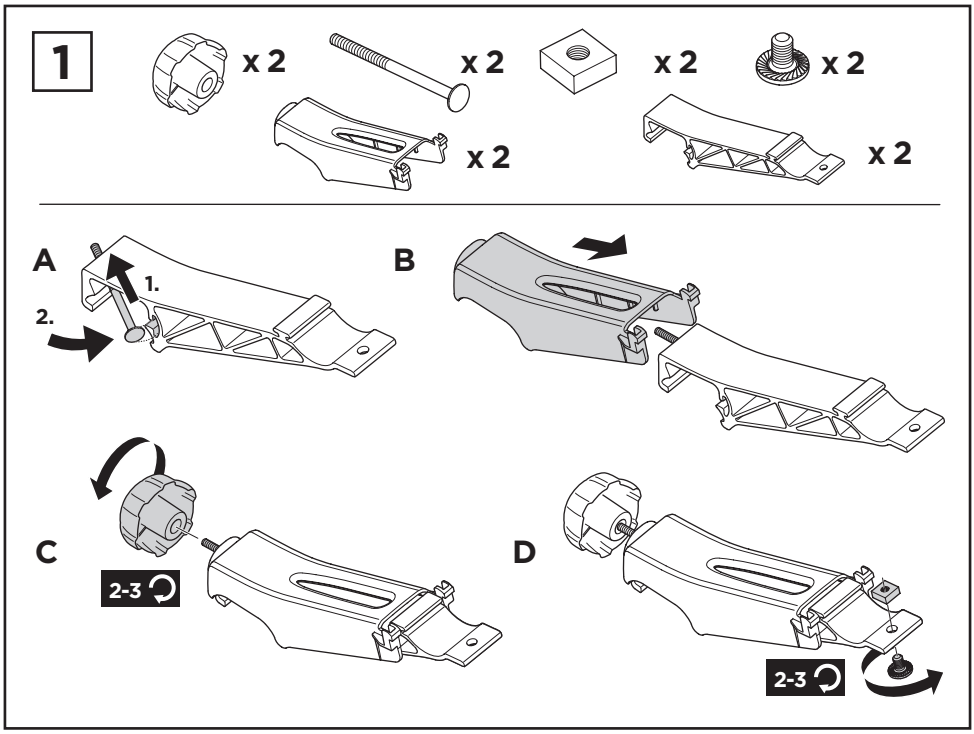
1
x 2
x 2
x 2
x 2
x 2
x 2
A
1.
2.
B
C
2-3
D
2-3

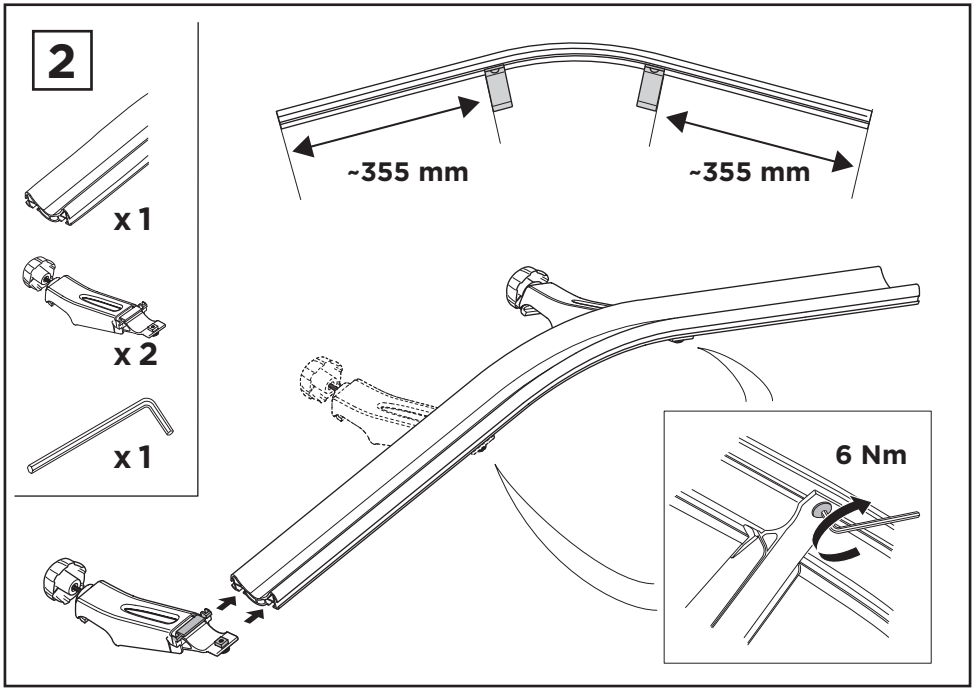
2
x 1
x 2
x 1
~355 mm
~355 mm
6 Nm

3

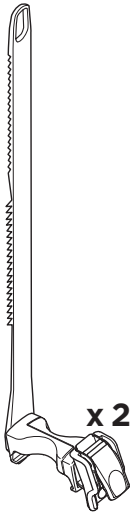





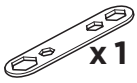

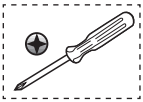

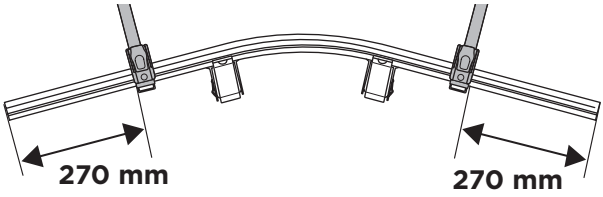

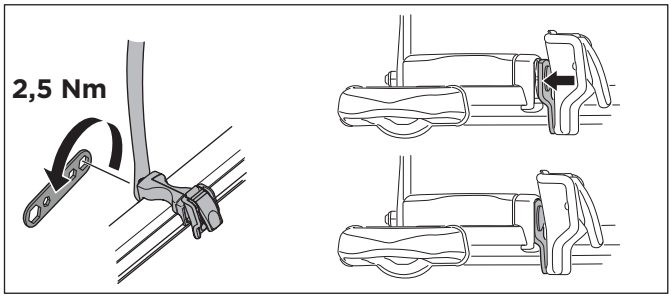

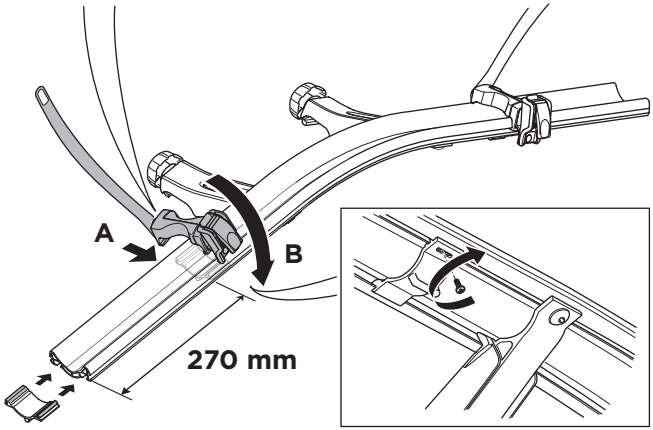

4





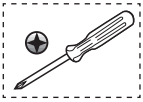

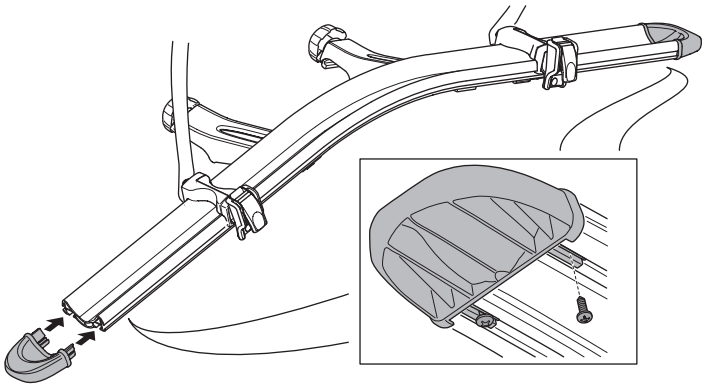

5



x 2

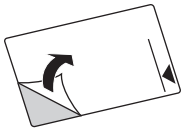

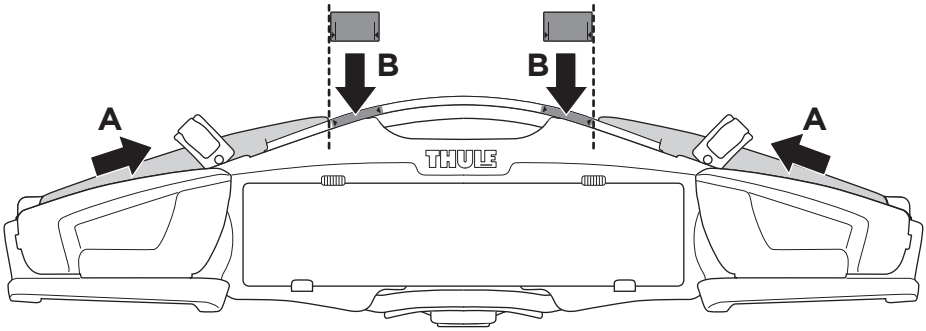

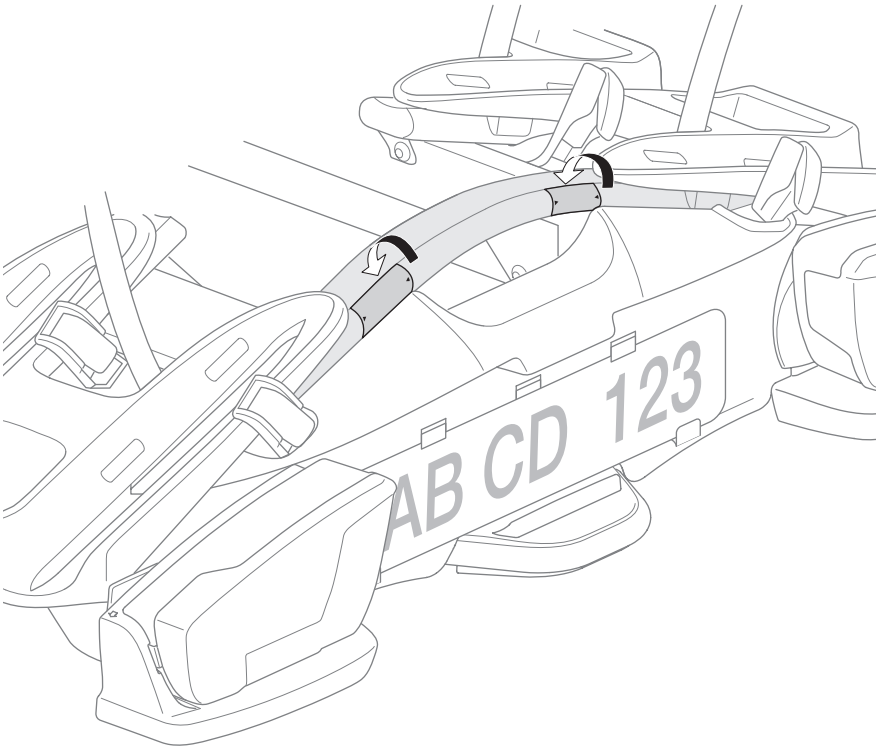

6

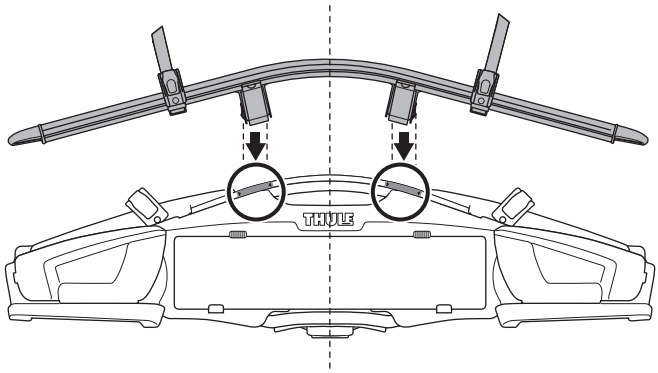

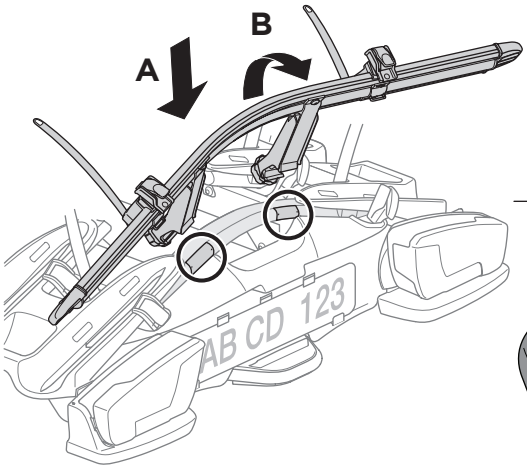

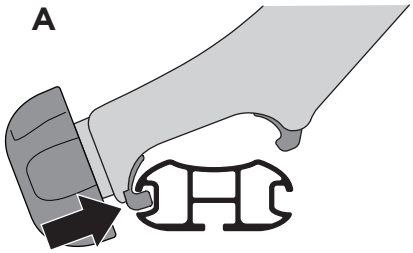

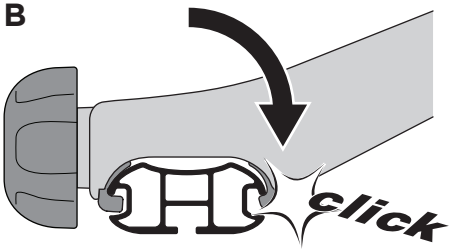

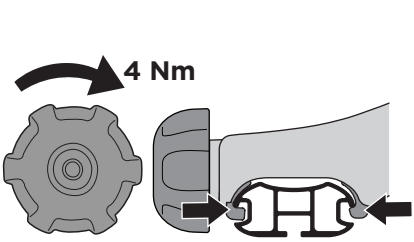

7



x 1

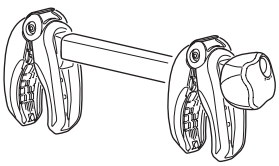

x 1

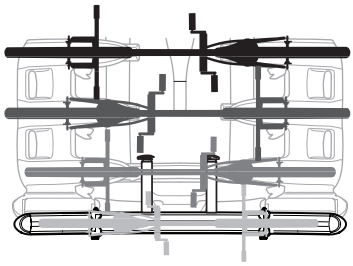



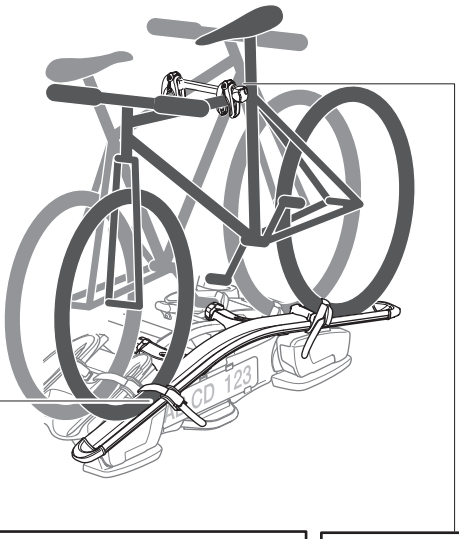

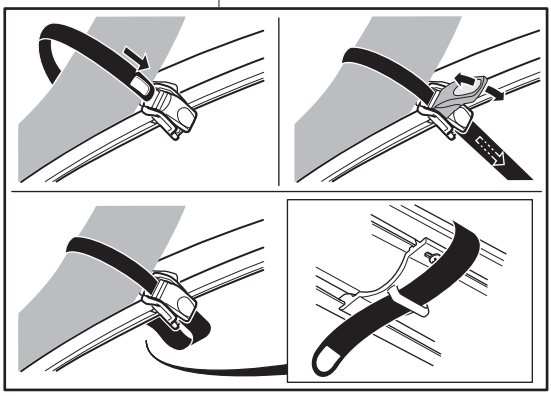

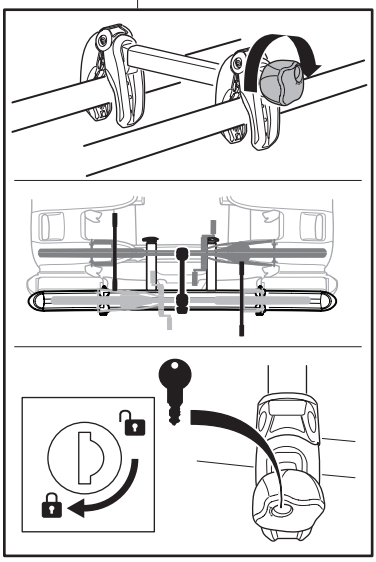

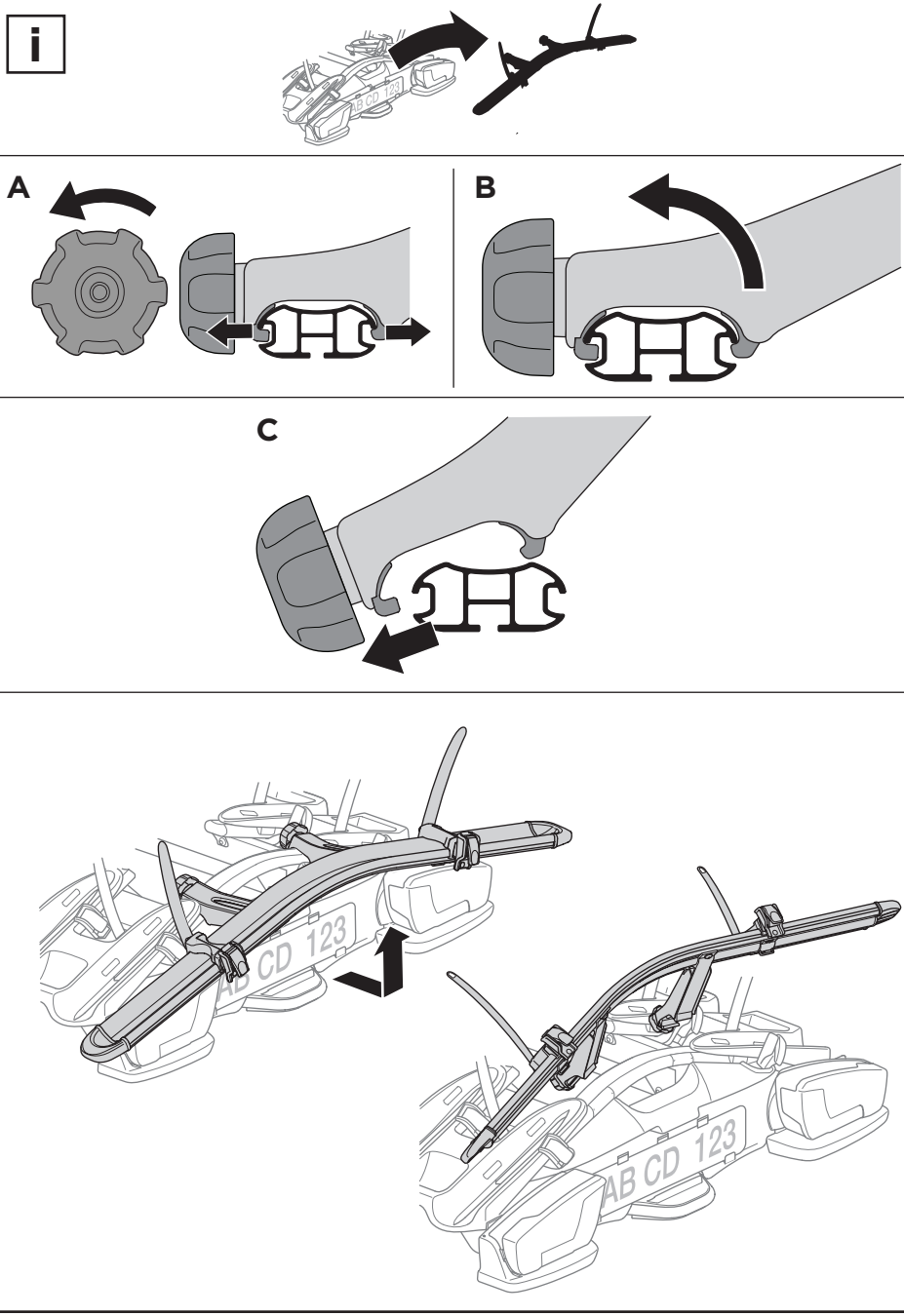

Thule Sweden AB, Box 69, 330 33 Hillerstorp, SWEDEN
info@thule.com
www.thule.com
PART OF THULE GROUP
© Thule Group 2015. All rights reserved.
501-8108-01