Thule Canyon XT 859XT

› Instructions



Carrier Basket

THULE BRING IT! GUARANTEE®
THULE.COM

TÜVRheinland CERTIFIED
www.tuv.com
ID 1000000000

GS geprüfte Sicherheit

CITY CRASH
Complies with ISO norm

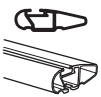
THULE WingBar/ AeroBlade

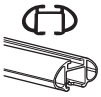
THULE AeroBar/ Rapid Aero

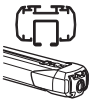
THULE SlideBar


THULE ProBar


THULE SquareBar

20161026
501-8134-02

Bring your life
thule.com

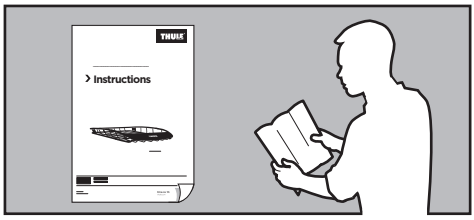
THULE
› Instructions

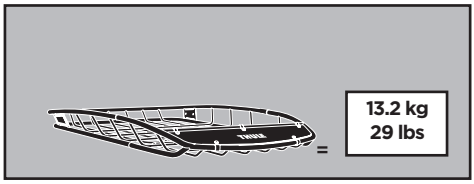
=
13.2 kg
29 lbs

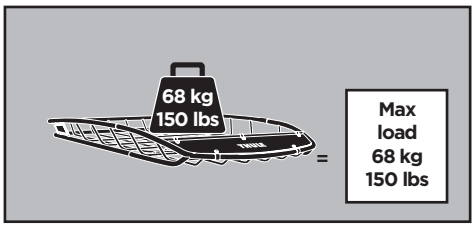
68 kg
150 lbs
=
Max
load
68 kg
150 lbs

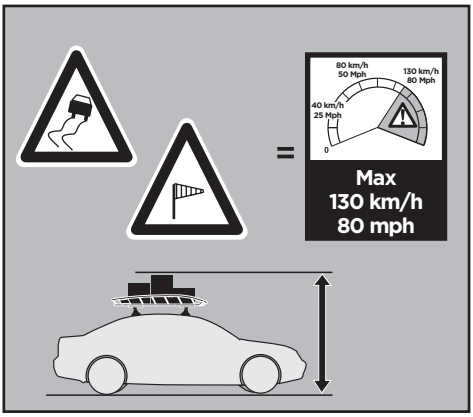
=
80 km/h
50 Mph
130 km/h
80 Mph
40 km/h
25 Mph
0
Max
130 km/h
80 mph

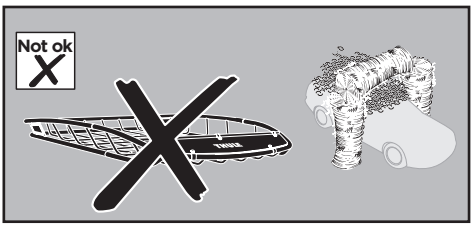
Not ok

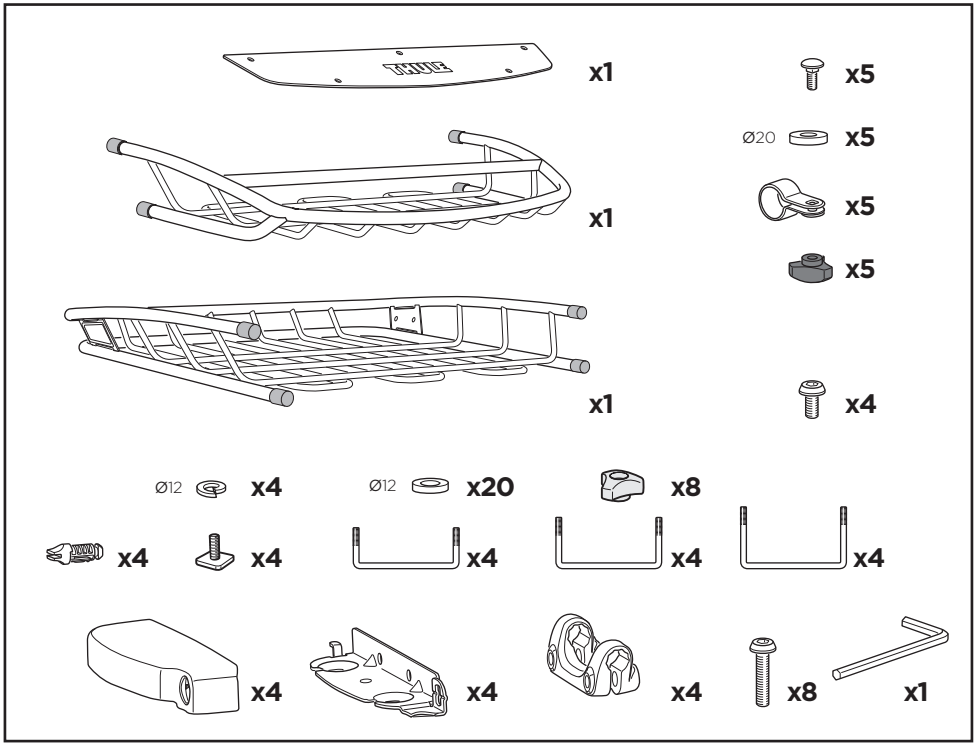
x1
x1
x1
x5
Ø20 x5
x5
x5
x4
Ø12 x4
Ø12 x20
x8
x4
x4
x4
x4
x4
x4
x4
x4
x8
x1

1

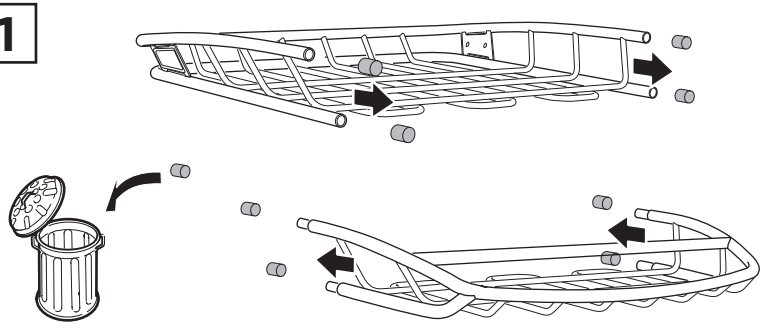

2

x4

Ø12 x4

x1

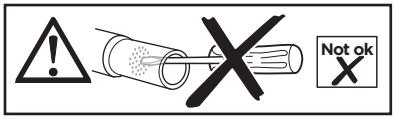

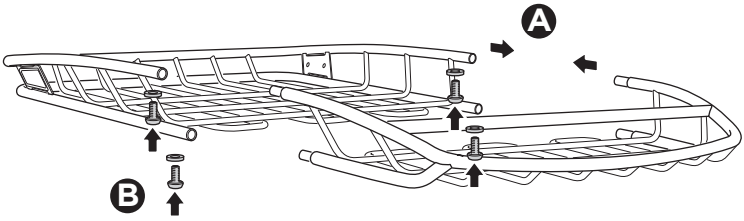

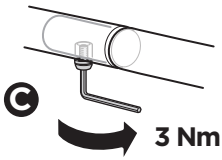

3

x5

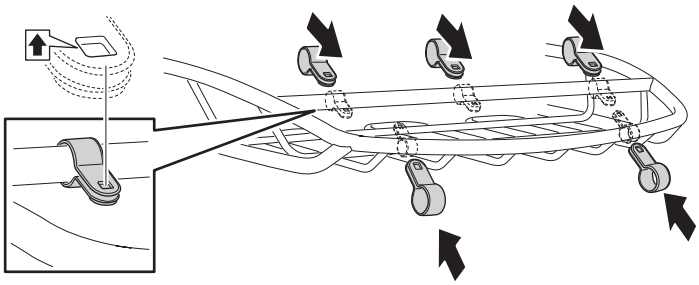

4

x5

Ø20 x5

x1

x5

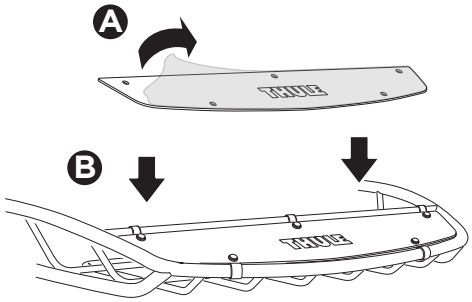

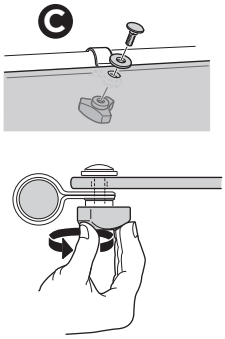

5

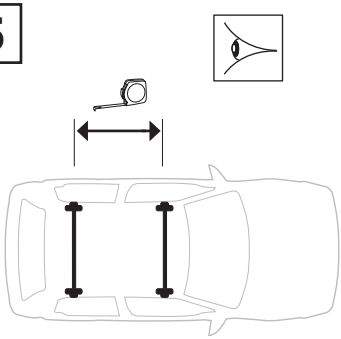

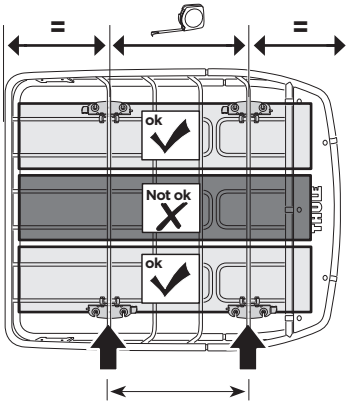

Min 20″ / 510 mm

x8

Ø12 x8



x4



x4

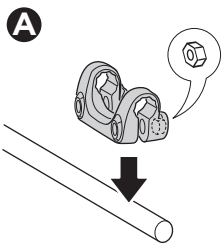

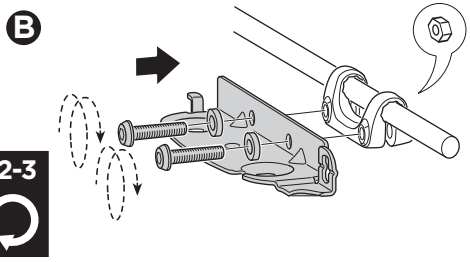

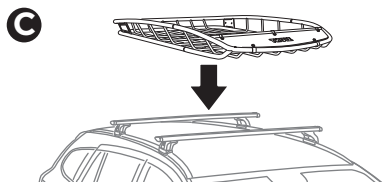

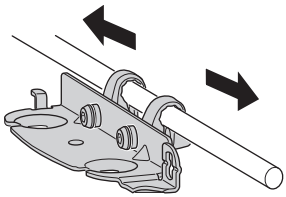

6a

x4 Ø12 x4 x4

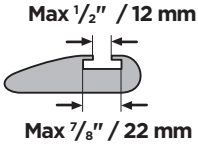

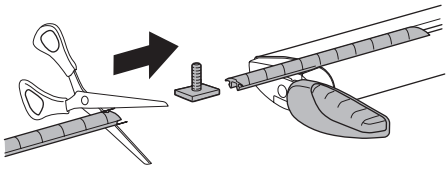

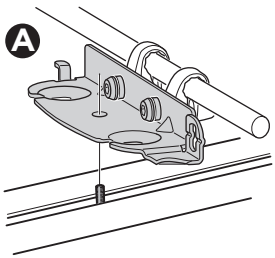

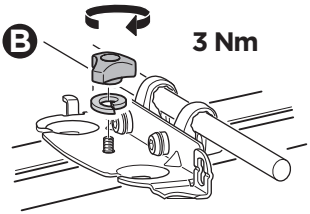

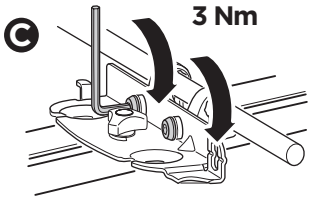

6b

x4 x4 x4 Ø12 x8 x8

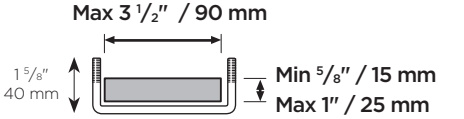

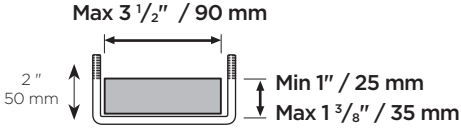

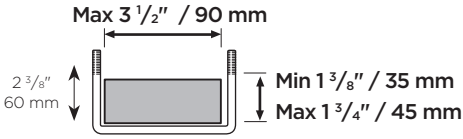

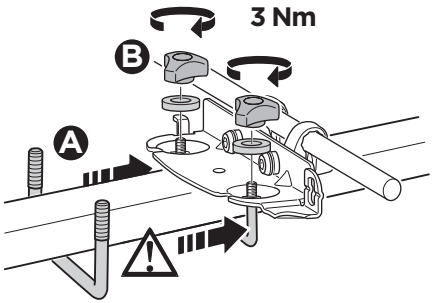

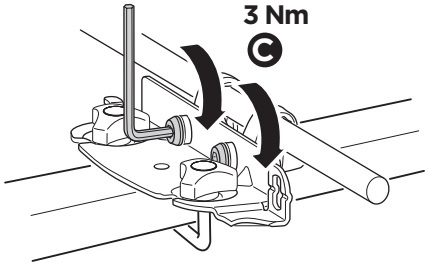

7



x4

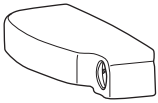

x4

A

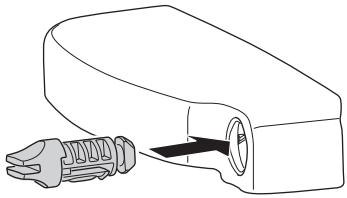

B

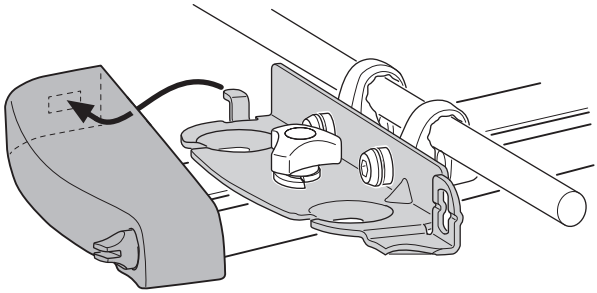

C

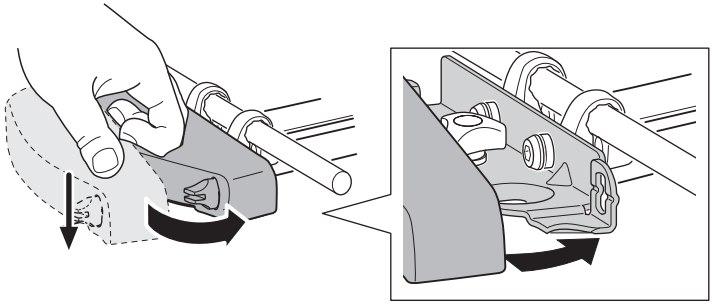

D

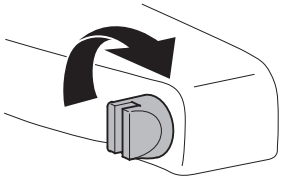

i

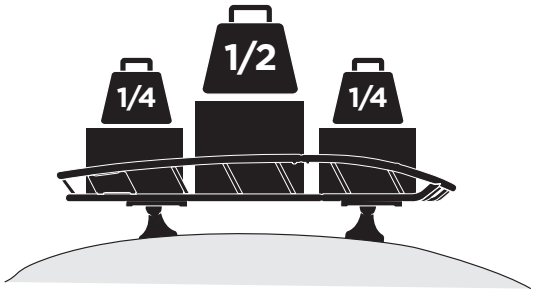

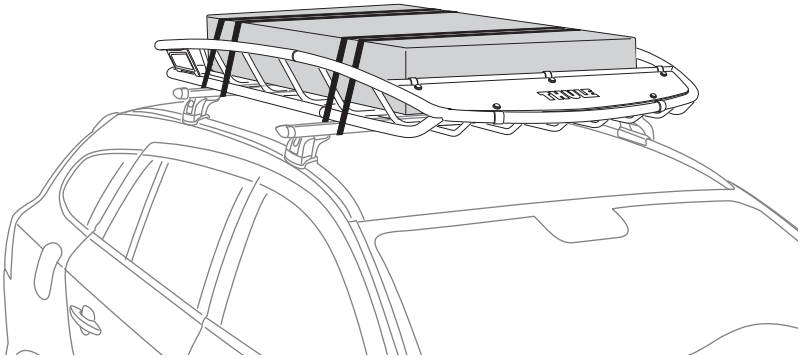

Thule Sweden AB, Box 69, 330 33 Hillerstorp, SWEDEN
Thule Inc., 42 Silvermine Road, Seymour, Connecticut 06483, USA
info@thule.com
Phone: 800-238-2388
www.thule.com
PART OF THULE GROUP
© Thule Group 2016. All rights reserved.
501-8134-02