› Instructions

Thule Excellent - 4th Rail Kit

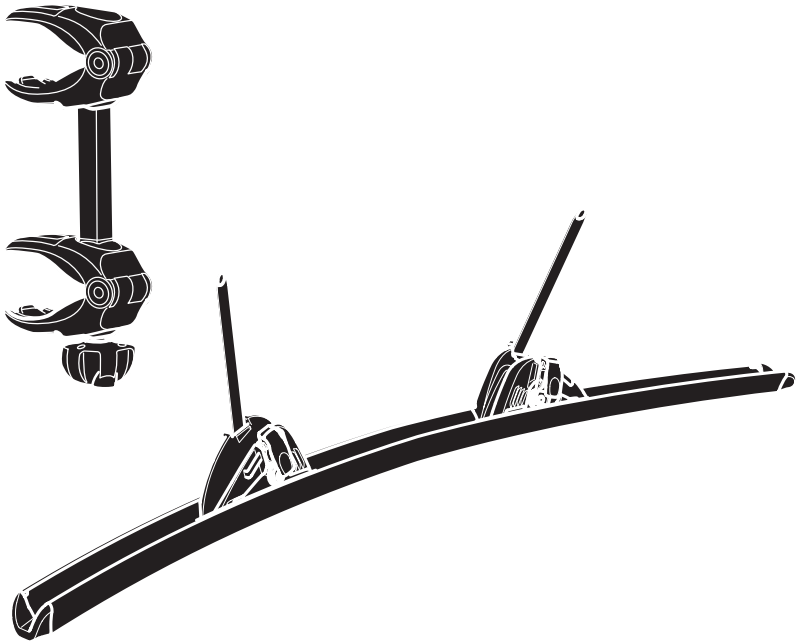

Prod no.: 309824-302035
Doc. no.: EX904-04 / 501-7694-04
Date: 29/10/2019

Bring your life
thule.com

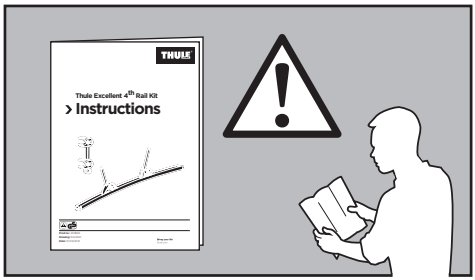
THULE
Thule Excellent 4th Rail Kit
› Instructions

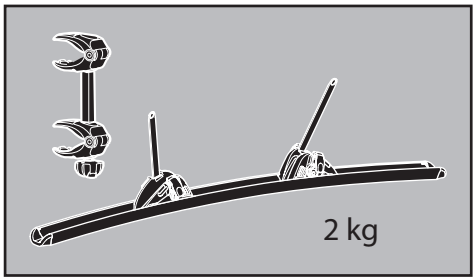
2 kg

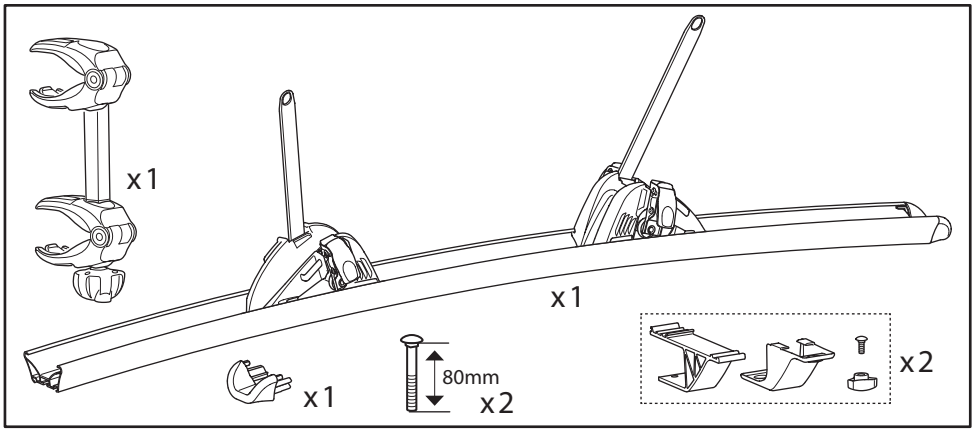
x 1
x 1
x 1
80mm
x 2
x 2

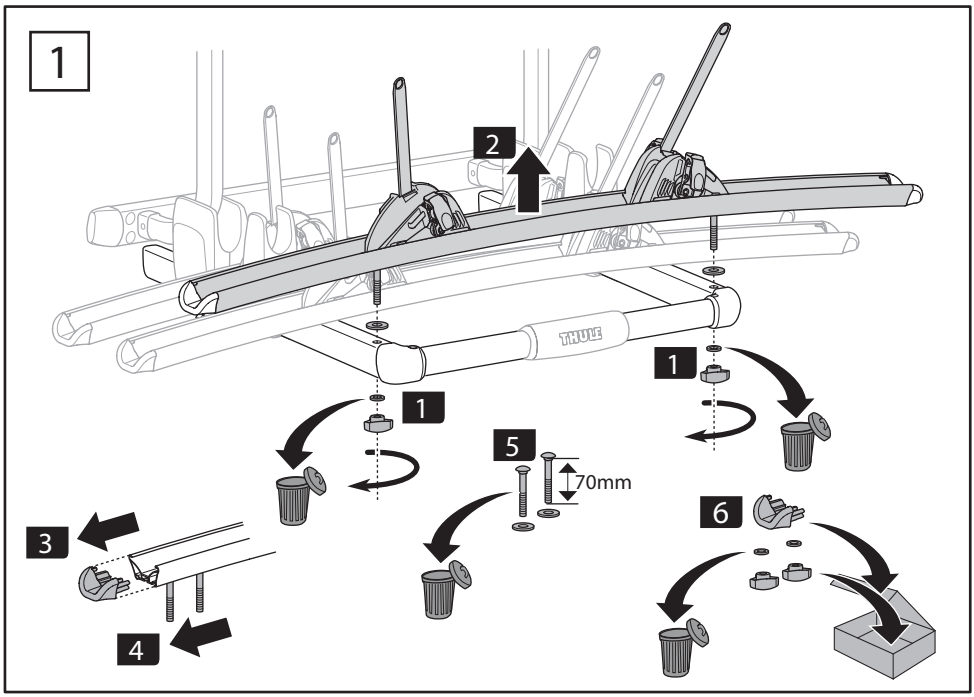
1
2
1
1
5
70mm
6
3
4

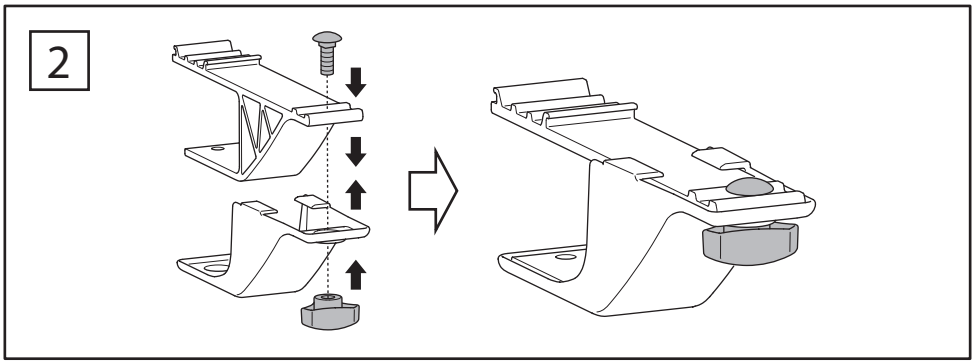
2

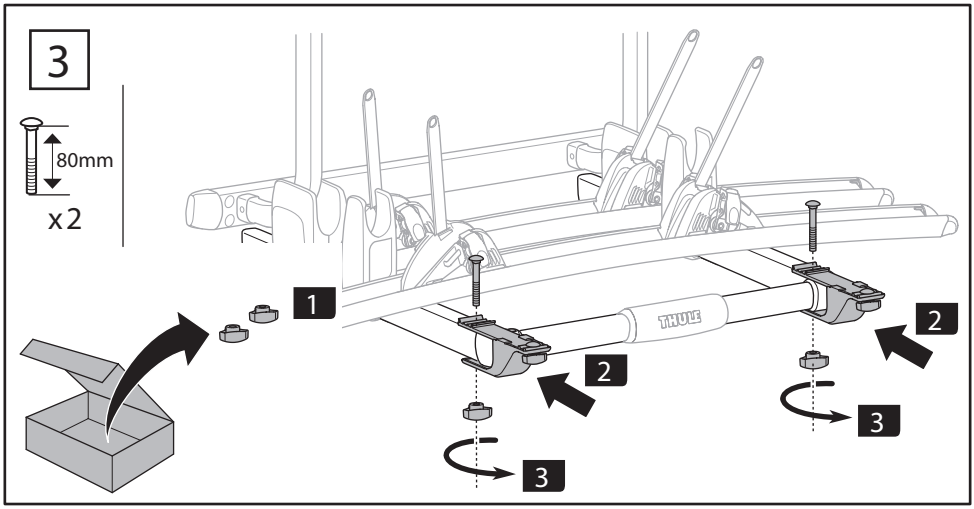
3
80mm
x2
1
2
2
3
3
THULE

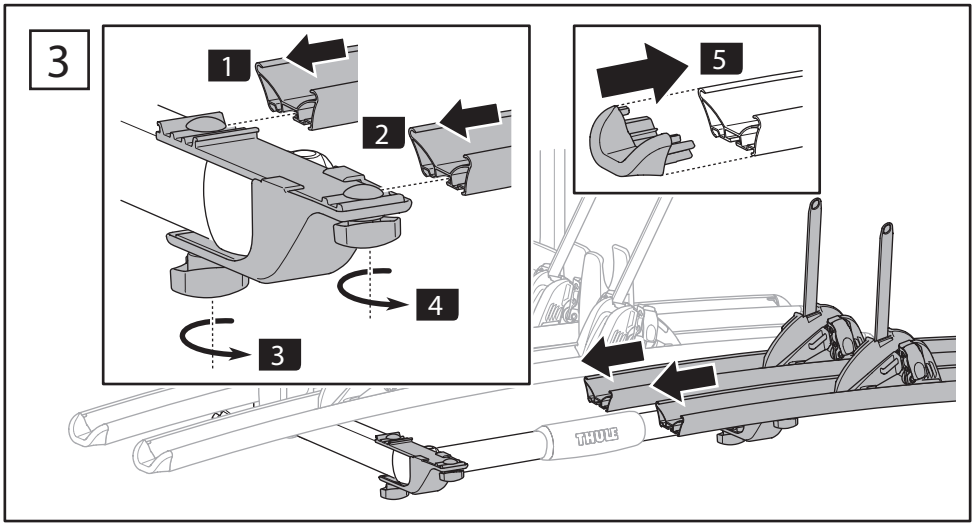
3
1
2
3
4
5
THULE

4

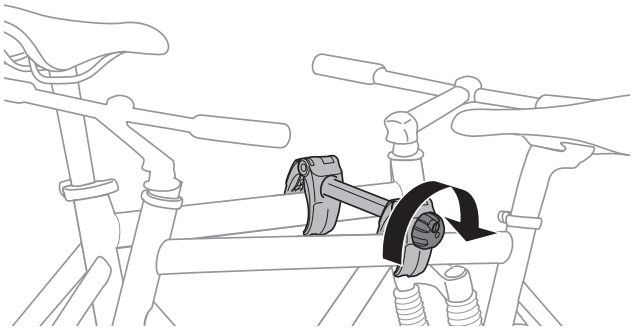

i

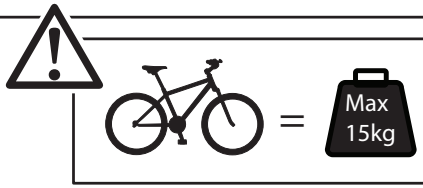

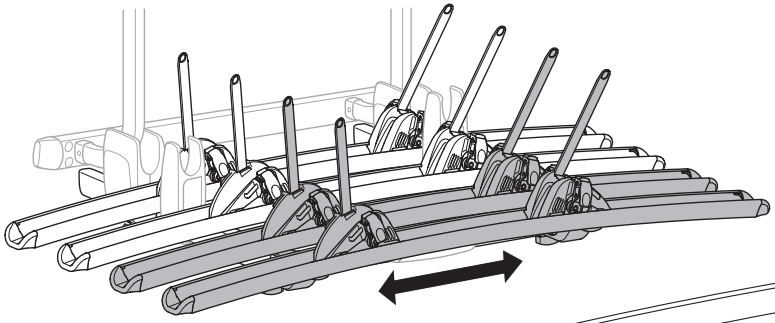

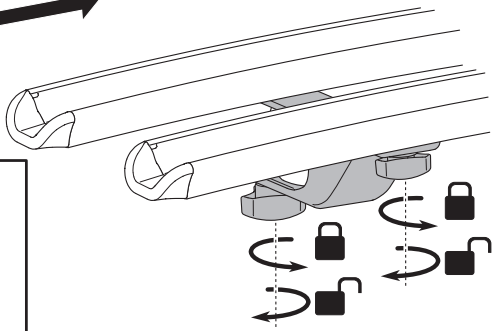

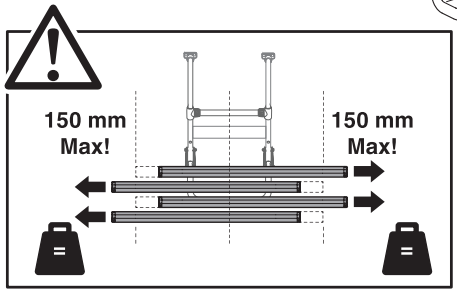

EX904-04 501-7694-04

Thule NV, Kortrijkstraat 343 – BE 8930 Menen, BELGIUM
infoRV @ thule.com
www.thule.com