Thule VeloCompact

924, 925

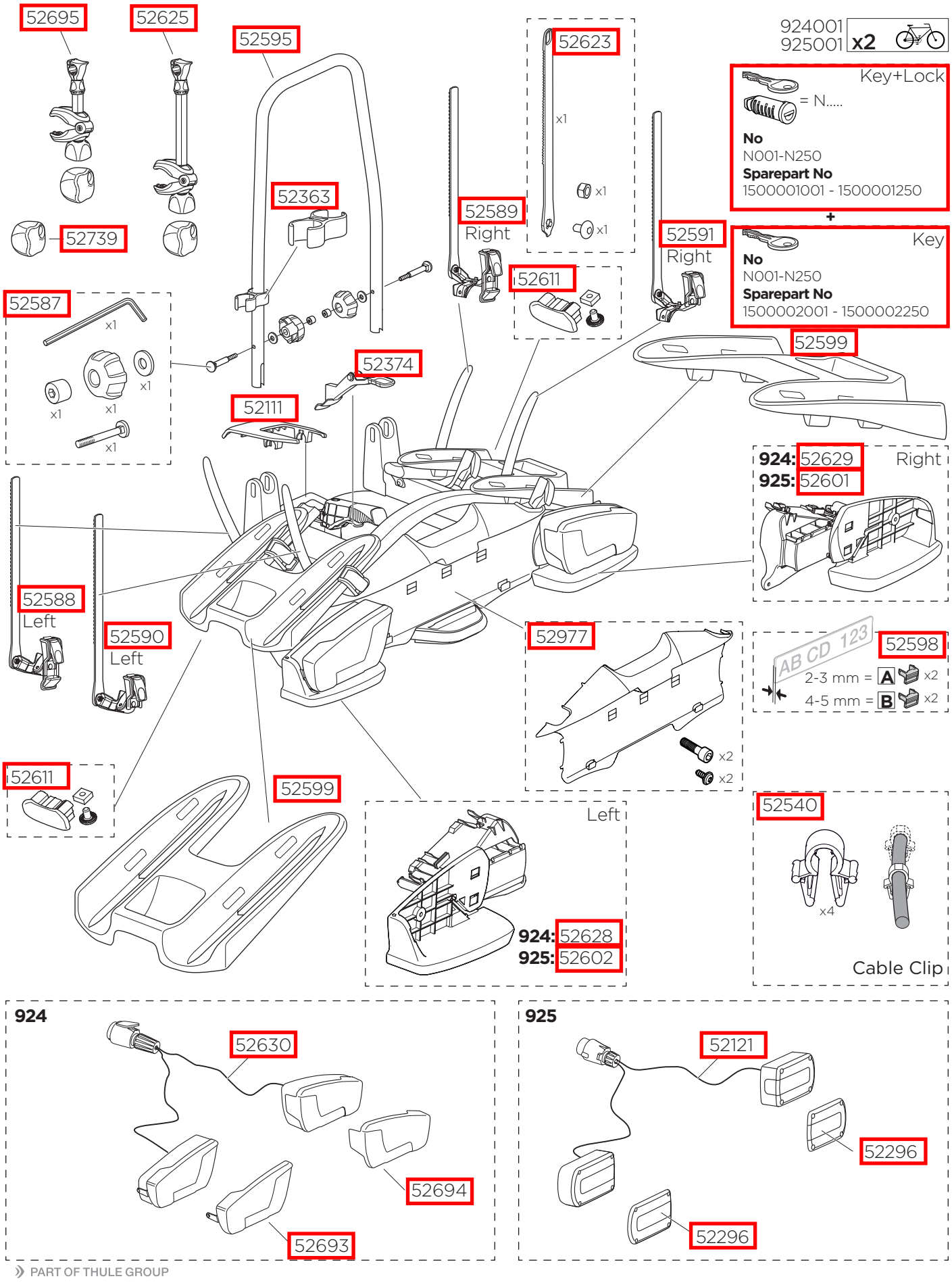

PART OF THULE GROUP