1 Kit 145199

DODGE Ram 1500, 4-dr Crew Cab / Quad Cab, 19-

ISO 11154-E

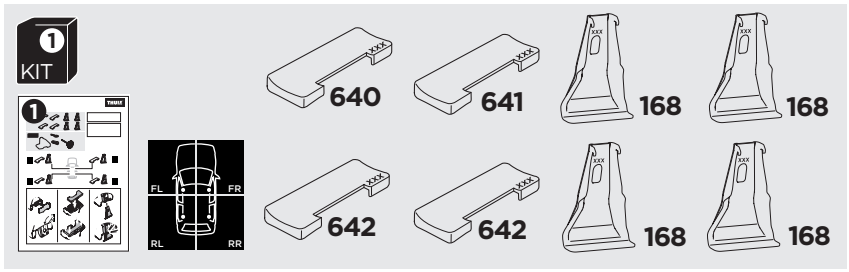

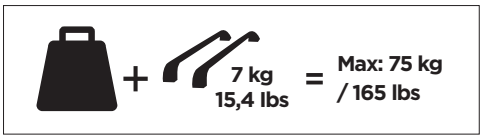

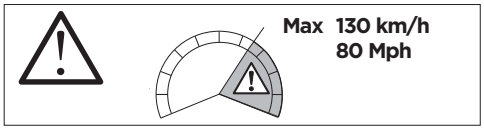

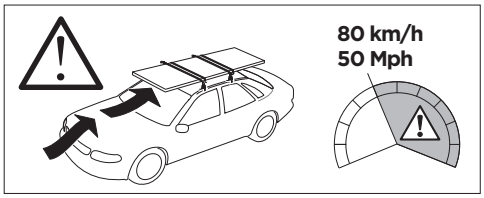

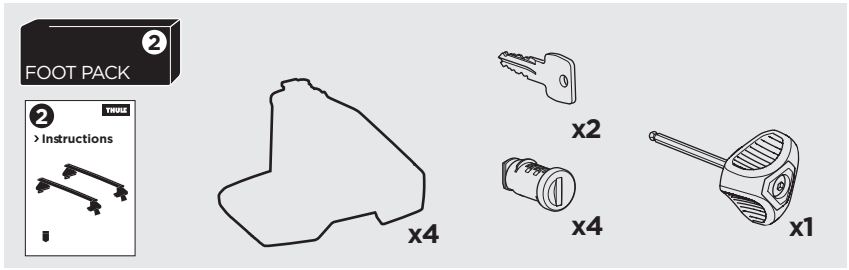

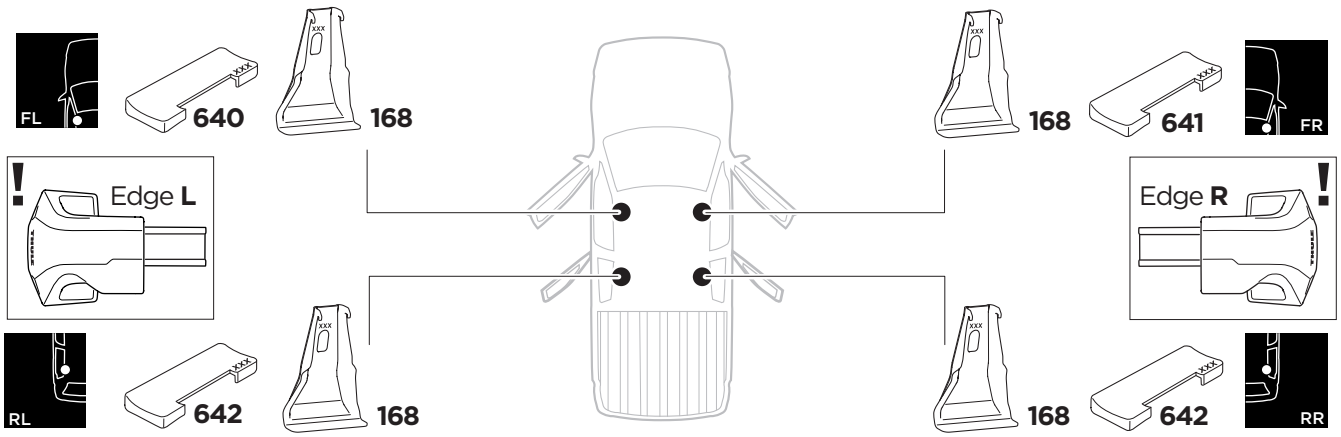

1

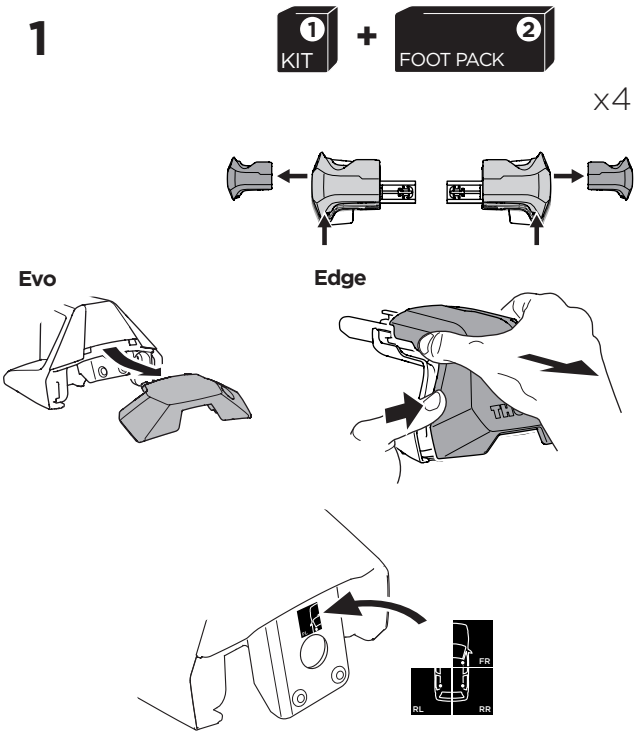

2

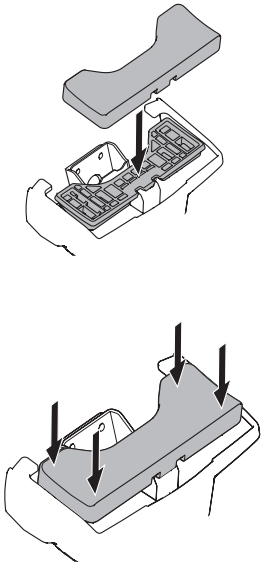

3

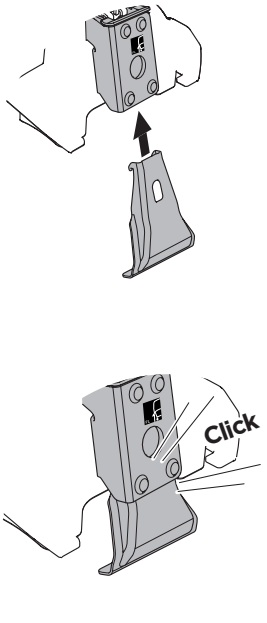



2

521-5199-01

Bring your life
thule.com

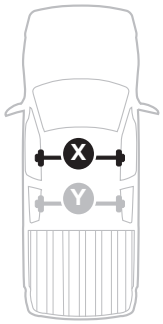

THULE WingBar Evo / THULE WingBar Edge / THULE WingBar / THULE SquareBar Evo	Evo X (scale)	Edge X (scale)
DODGE Ram 1500, 4-dr Crew Cab / Quad Cab, 19-	**64**	**N/A**

THULE ProBar Evo / THULE SlideBar Evo	X (mm/inch)
DODGE Ram 1500, 4-dr Crew Cab / Quad Cab, 19-	**1291 mm / 50 7/8“**

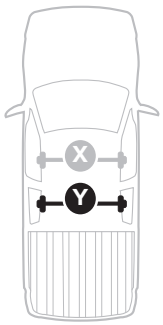

THULE WingBar Evo / THULE WingBar Edge / THULE WingBar / THULE SquareBar Evo	Evo Y (scale)	Edge Y (scale)
DODGE Ram 1500, 4-dr Crew Cab / Quad Cab, 19-	**64**	**N/A**

THULE ProBar Evo / THULE SlideBar Evo	Y (mm/inch)
DODGE Ram 1500, 4-dr Crew Cab / Quad Cab, 19-	**1291 mm / 50 7/8“**

	W (mm/inch)	Z (mm/inch)
DODGE Ram 1500, 4-dr Crew Cab / Quad Cab, 19-	**735 mm / 28 7/8“**	**250 mm / 9 7/8“**

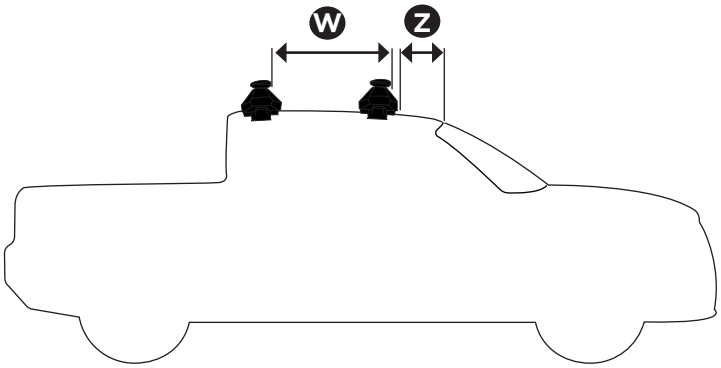

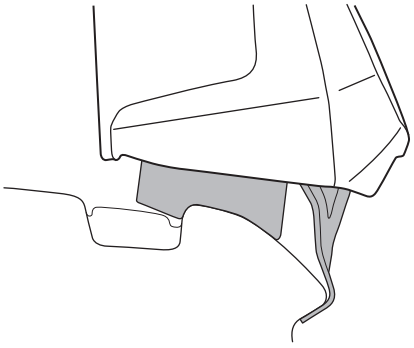



2

Thule Sweden AB, Borggatan 5
335 73 Hillerstorp, SWEDEN
» PART OF THULE GROUP

info@thule.com

www.thule.com

© Thule Group 2019. All rights reserved.