Thule Loading Ramp 9152

› Instructions

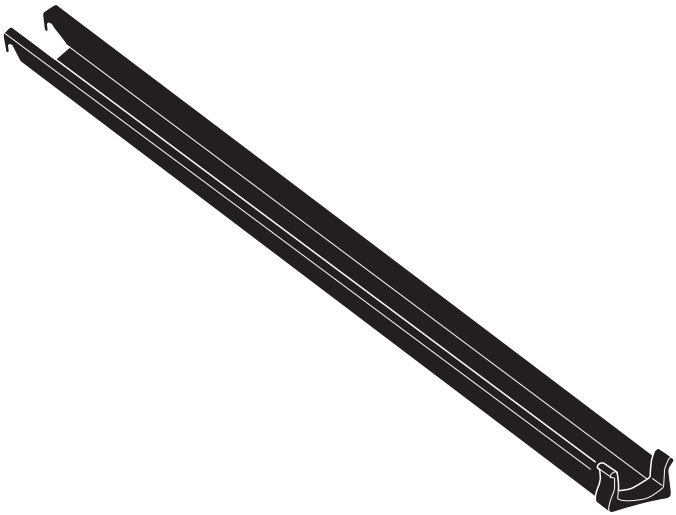

915200
4DF/8.20130815
501-7618-02

Bring your life
thule.com

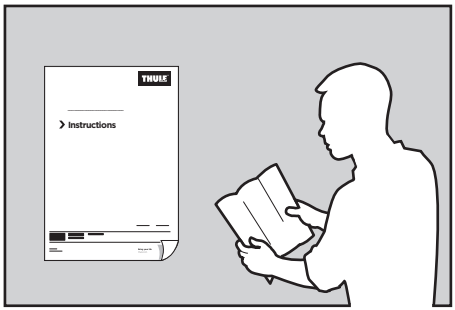

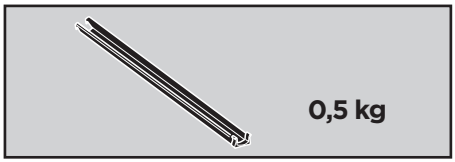

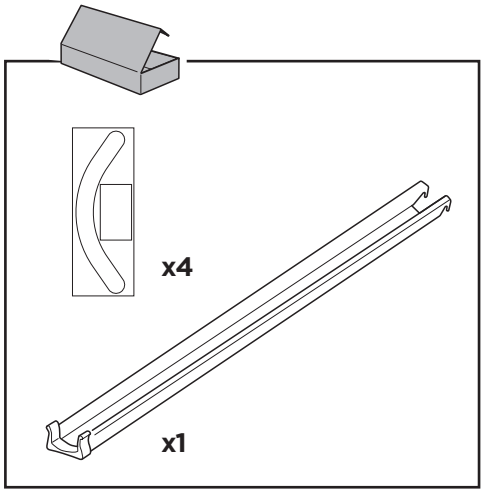

i

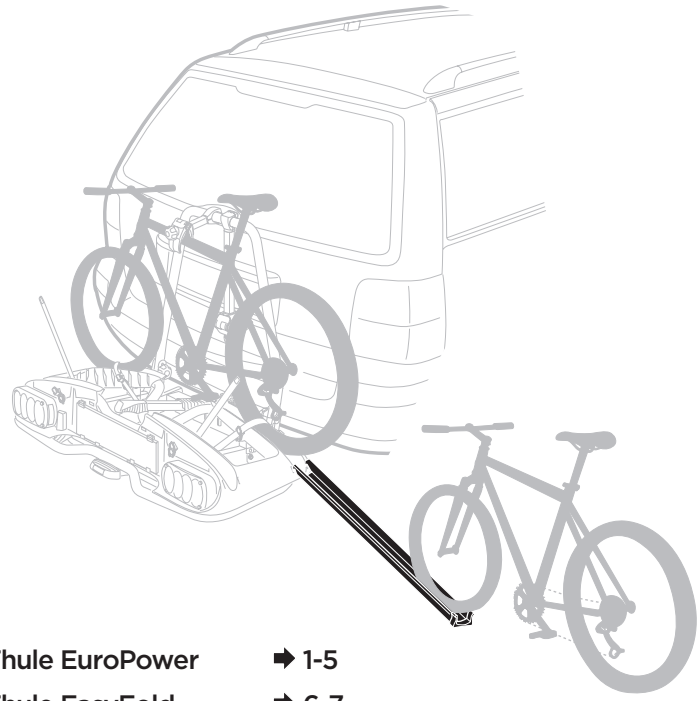

Thule EuroPower ➡ 1-5
Thule EasyFold ➡ 6-7
Thule EuroWay G2 ➡ 6-7
Thule EuroClassic ➡ 6-7

1

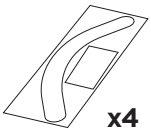

x4

A

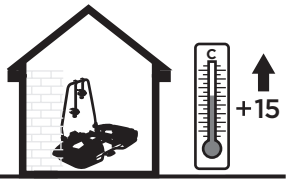

B



C



D

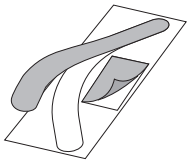

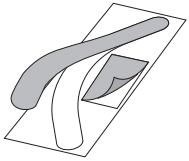

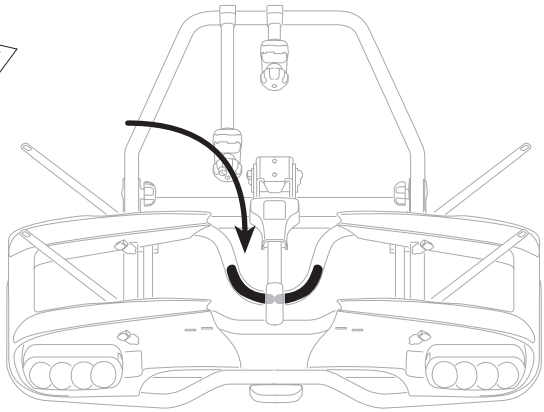

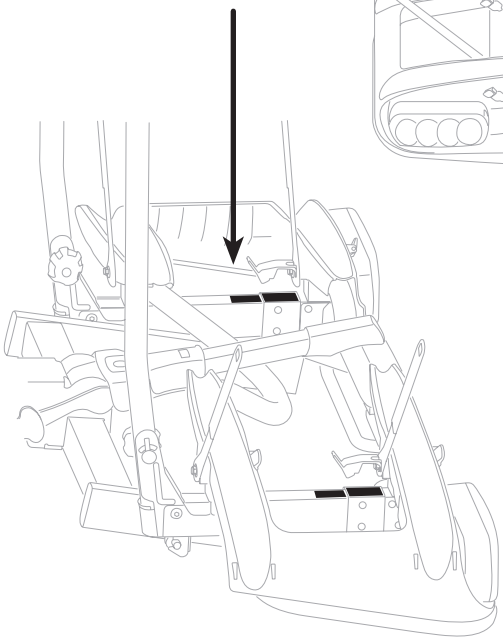

2

A

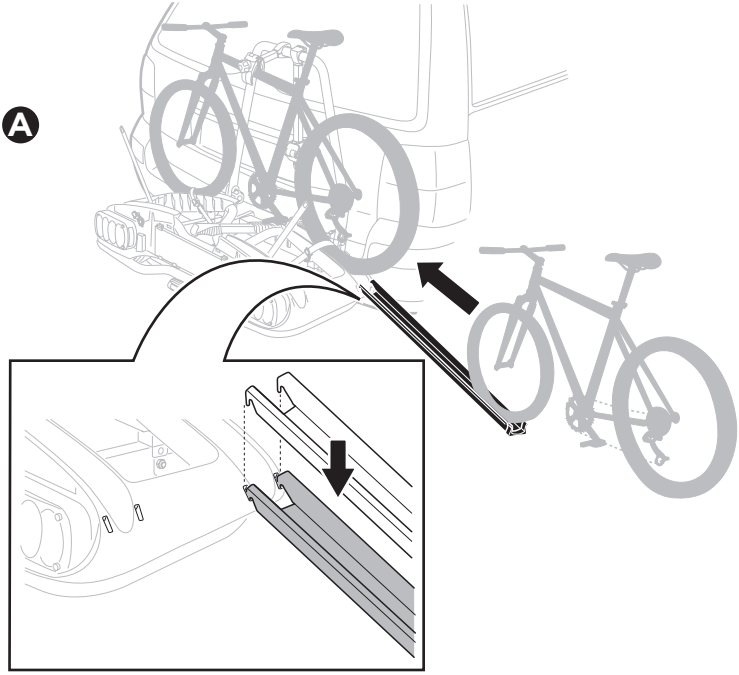

B

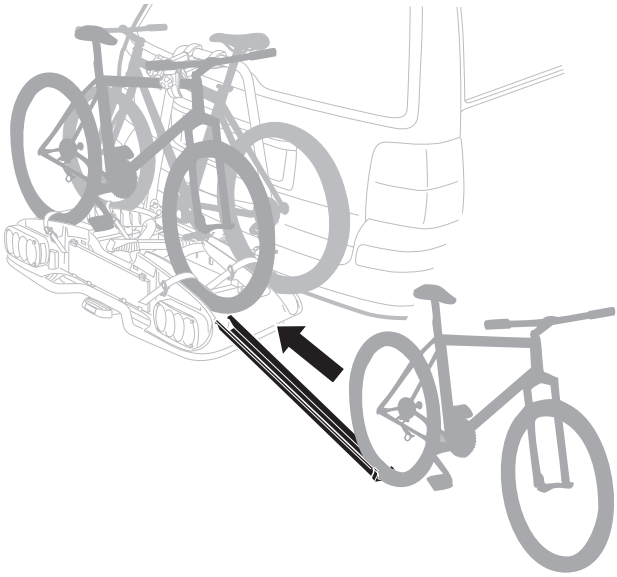

3

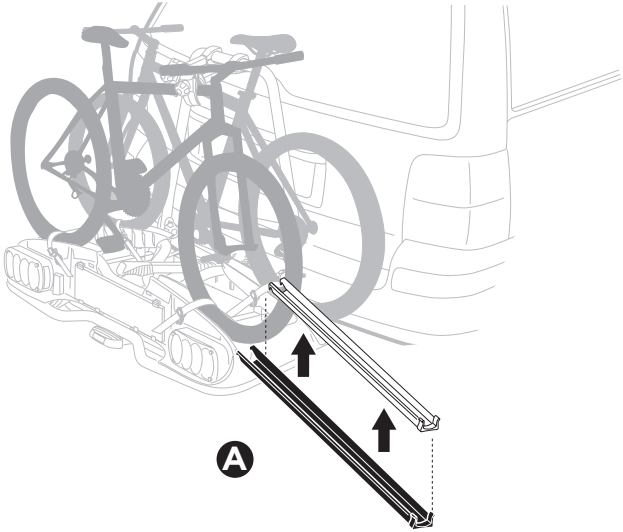

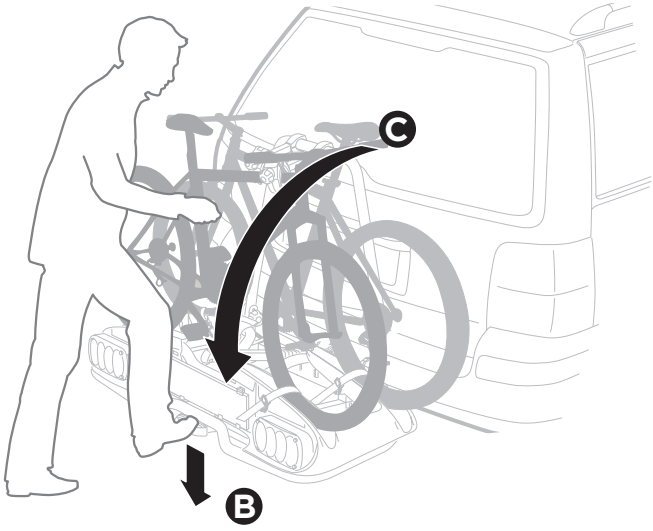



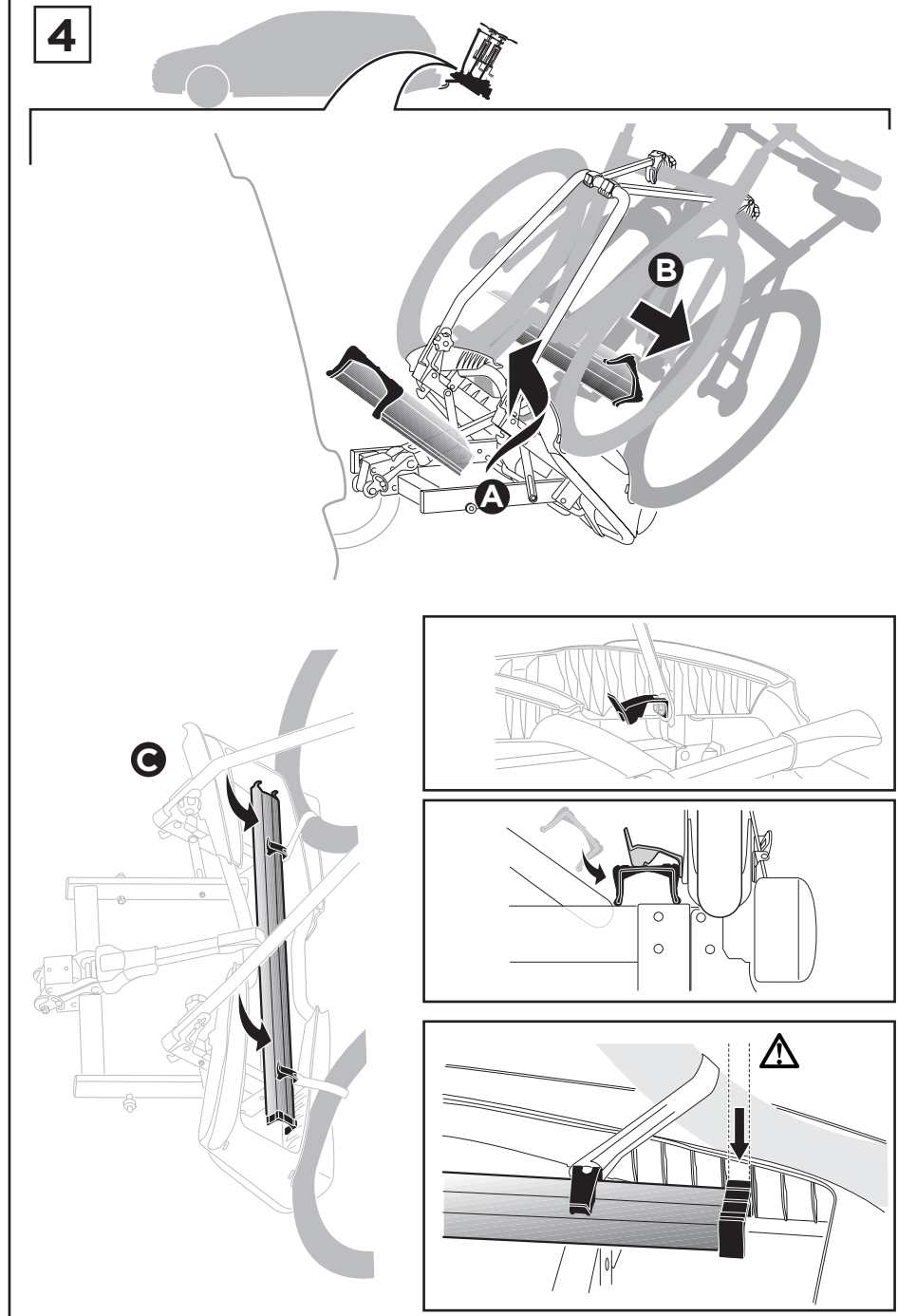
4
B
A
C

5

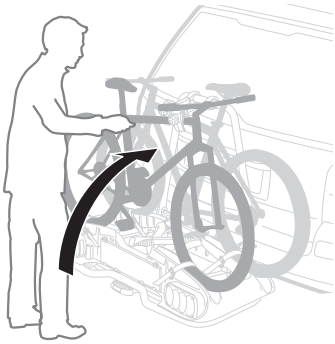

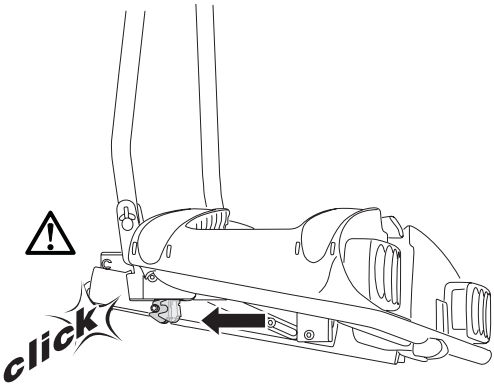

6

Thule EasyFold

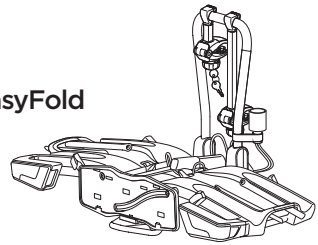

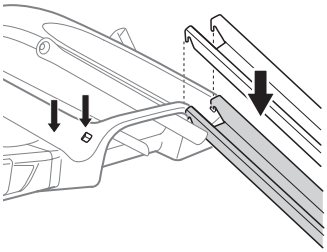

Thule EuroWay G2

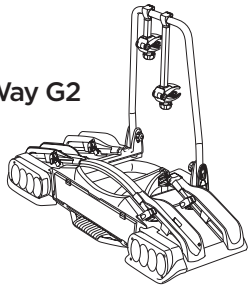

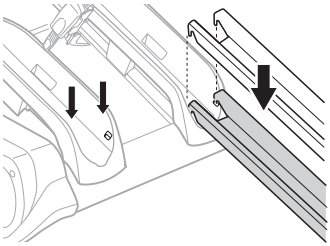

Thule EuroClassic

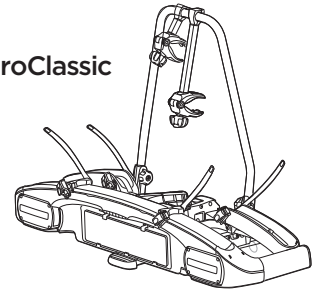

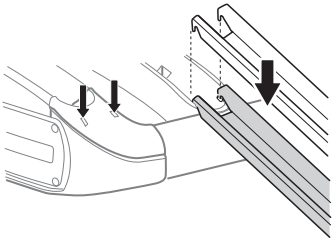

7

A

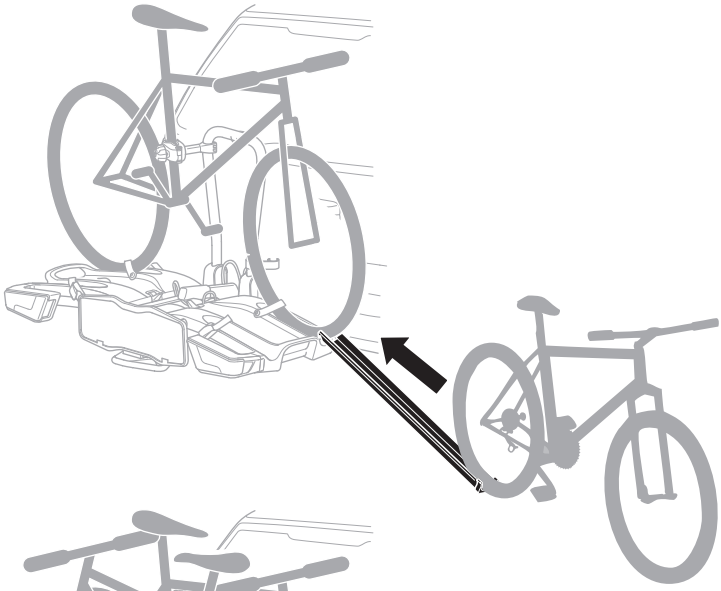

B

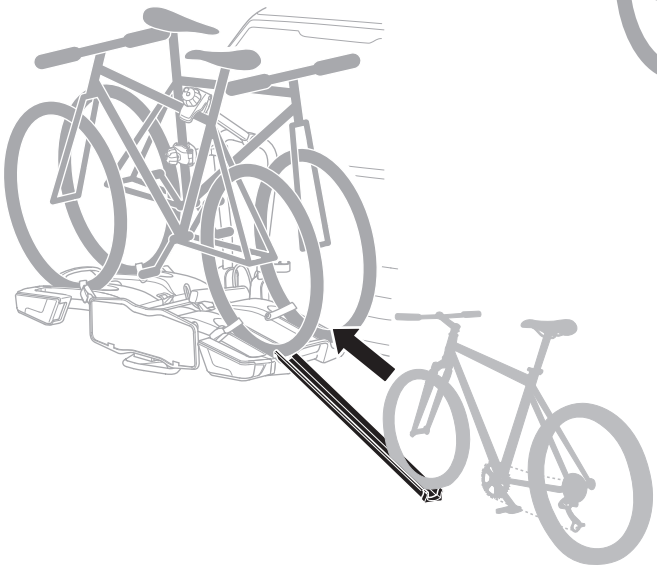

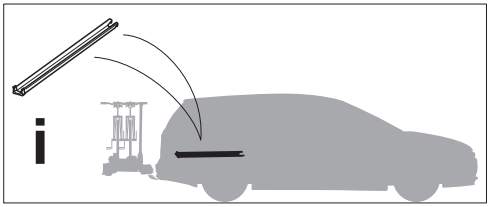

Thule Sweden AB, Box 69, 330 33 Hillerstorp, SWEDEN
info@thule.com
www.thule.com
PART OF THULE GROUP