1 Kit 5164

AUDI A7, 5-dr Hatchback, 18-

ISO 11154-E

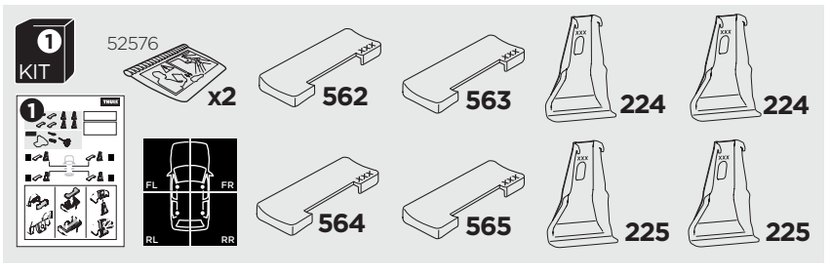

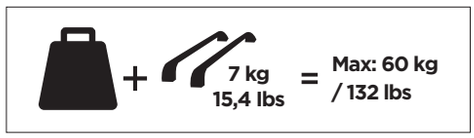

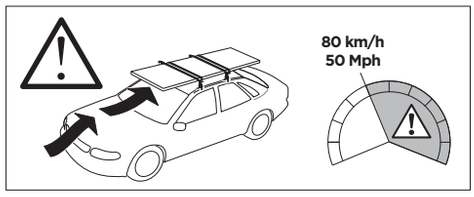

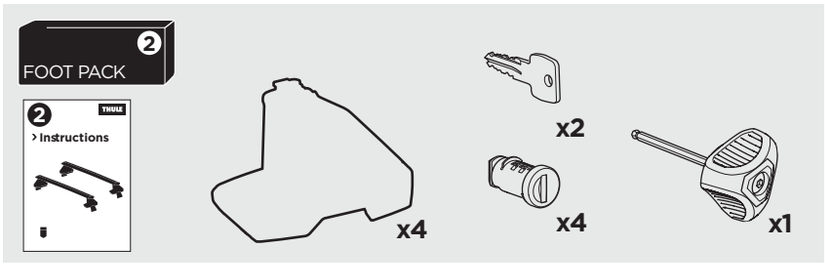

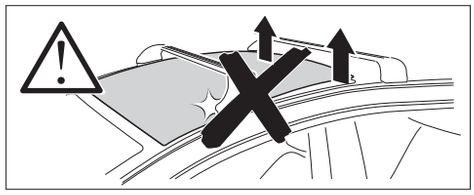

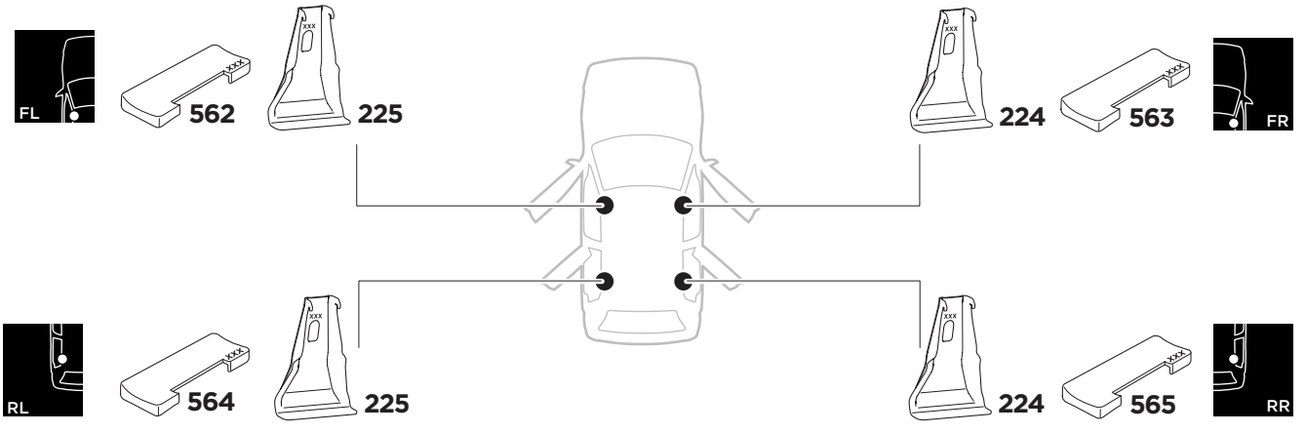

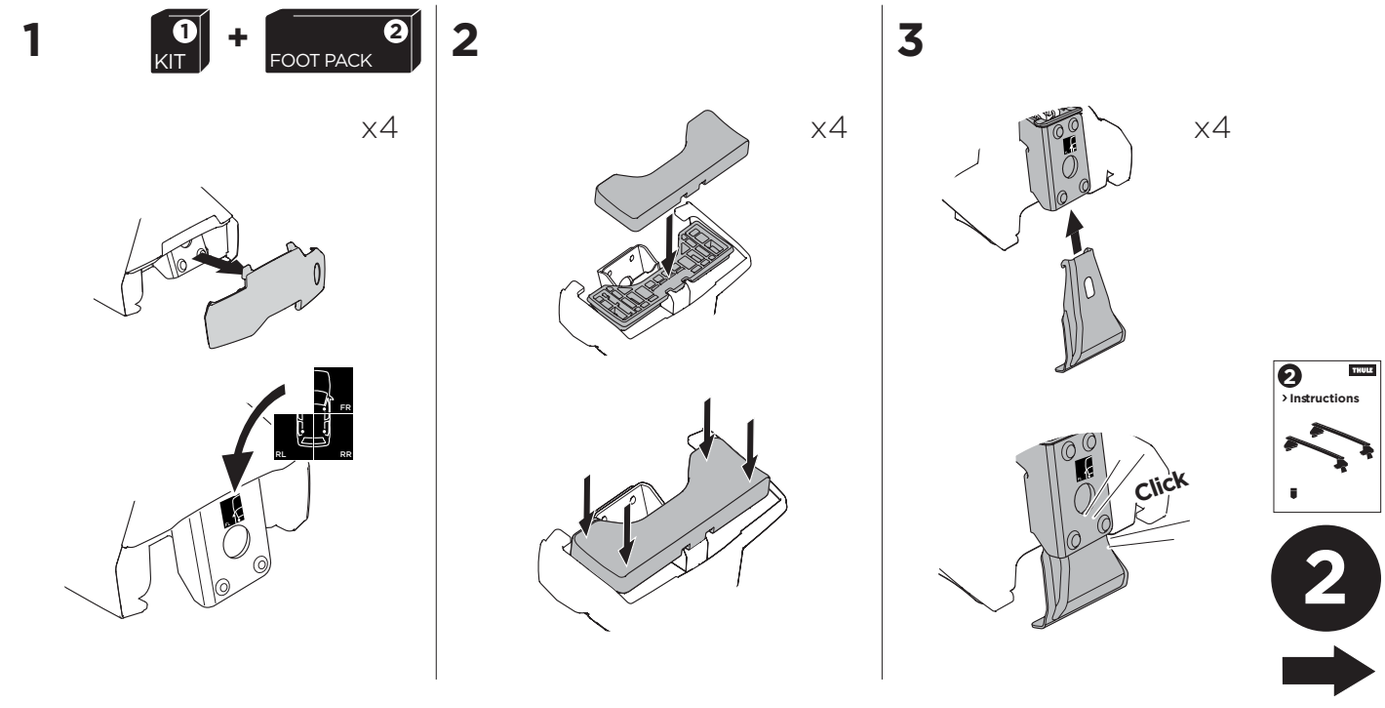

Bring your life
thule.com

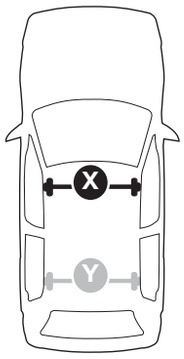

THULE WingBar Evo	THULE WingBar Edge	THULE WingBar	THULE SquareBar	Evo X (scale)	Edge X (scale)
AUDI A7, 5-dr Hatchback, 18-				**45,5**	**F**

THULE ProBar	THULE SlideBar	X (mm/inch)
AUDI A7, 5-dr Hatchback, 18-		**1106 mm / 43 1/2“**

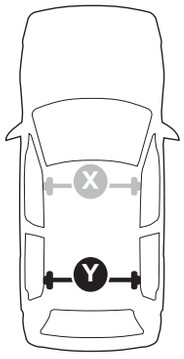

THULE WingBar Evo	THULE WingBar Edge	THULE WingBar	THULE SquareBar	Evo Y (scale)	Edge Y (scale)
AUDI A7, 5-dr Hatchback, 18-				**42,5**	**L**

THULE ProBar	THULE SlideBar	Y (mm/inch)
AUDI A7, 5-dr Hatchback, 18-		**1076 mm / 42 3/8“**

	W (mm/inch)	Z (mm/inch)
AUDI A7, 5-dr Hatchback, 18-	**760 mm / 29 7/8“**	**175 mm / 6 7/8“**

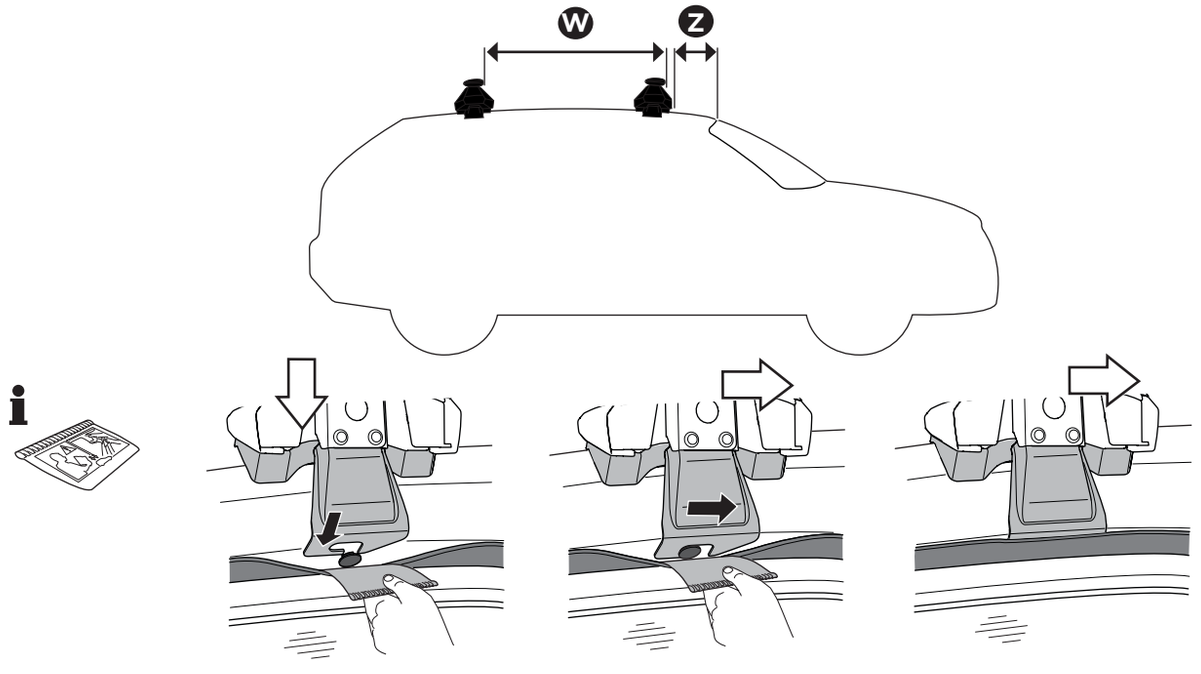

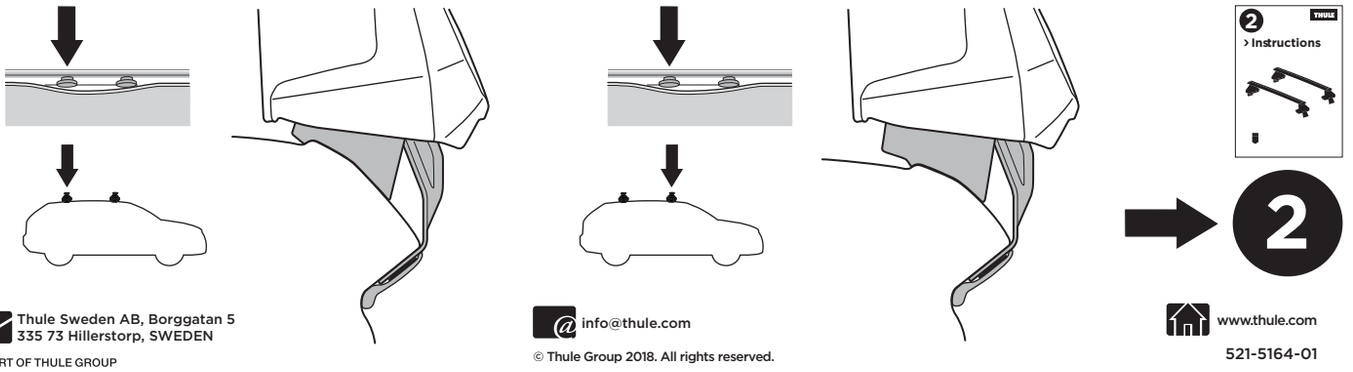

Thule Sweden AB, Borggatan 5
335 73 Hillerstorp, SWEDEN
» PART OF THULE GROUP

info@thule.com

www.thule.com

© Thule Group 2018. All rights reserved.

521-5164-01