Kit 5024

AUDI A1, 5-dr Hatchback, 12-18

ISO 11154-E

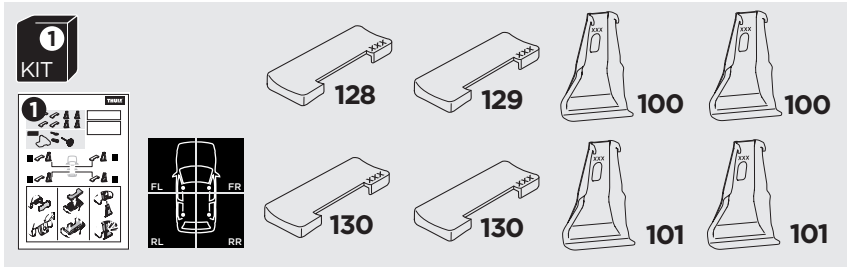

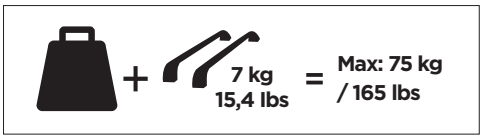

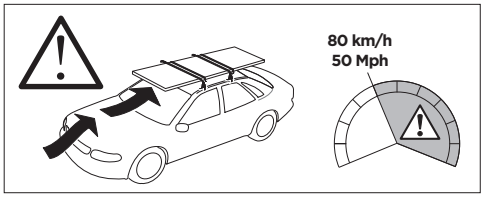

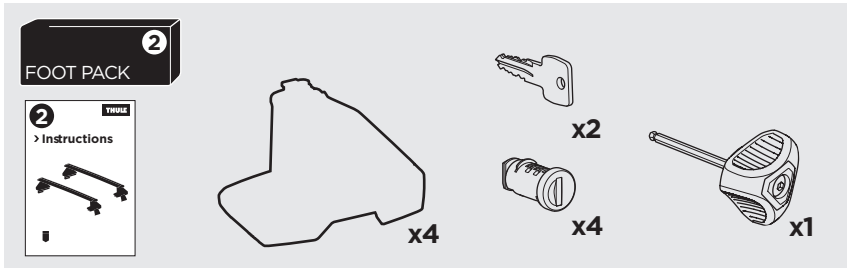

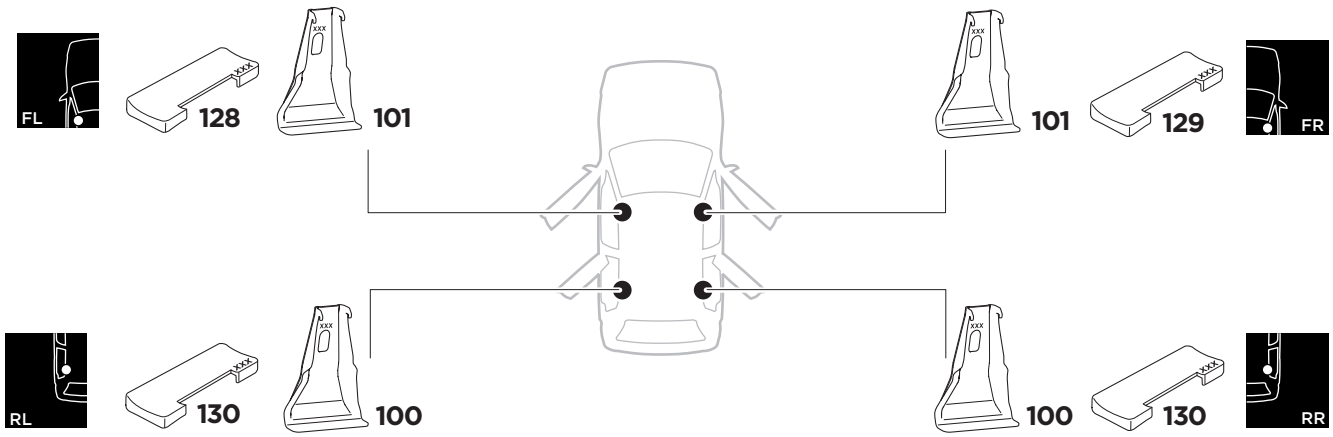

1



x4

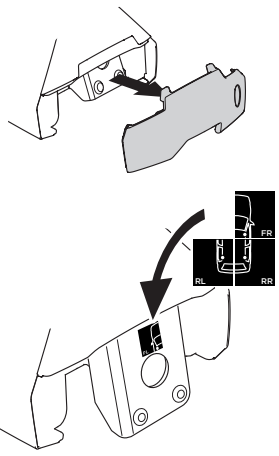

2

x4

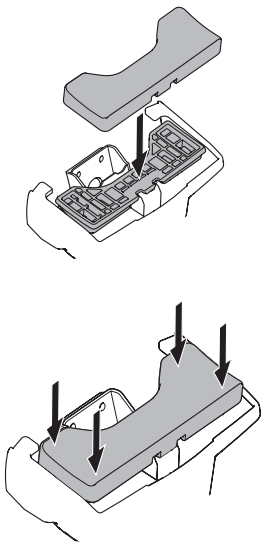

3

x4

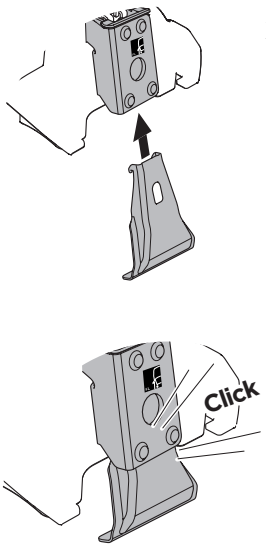



2

Bring your life
thule.com

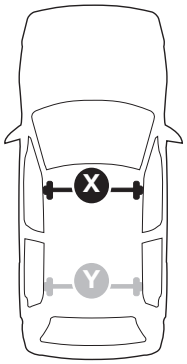

THULE WingBar Evo / THULE WingBar Edge / THULE WingBar / THULE SquareBar	Evo X (scale)	Edge X (scale)
AUDI A1, 5-dr Hatchback, 12-18	**35**	**I**

THULE ProBar / THULE SlideBar	X (mm/inch)
AUDI A1, 5-dr Hatchback, 12-18	**1001 mm / 39 3/8“**

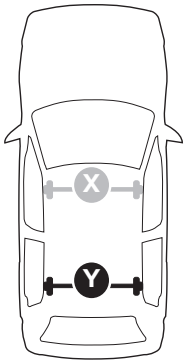

THULE WingBar Evo / THULE WingBar Edge / THULE WingBar / THULE SquareBar	Evo Y (scale)	Edge Y (scale)
AUDI A1, 5-dr Hatchback, 12-18	**33,5**	**L**

THULE ProBar / THULE SlideBar	Y (mm/inch)
AUDI A1, 5-dr Hatchback, 12-18	**986 mm / 38 7/8“**

	W (mm/inch)	Z (mm/inch)
AUDI A1, 5-dr Hatchback, 12-18	**700 mm / 27 1/2“**	**200 mm / 7 7/8“**

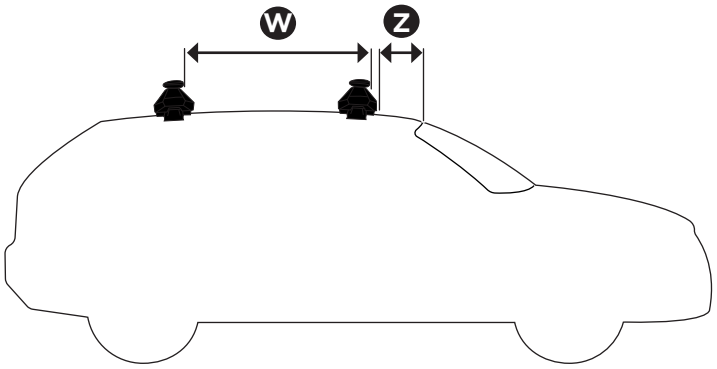

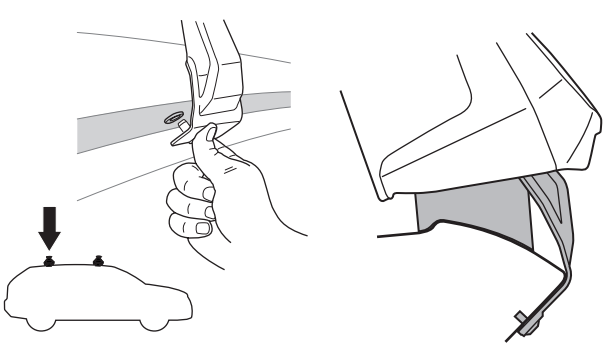

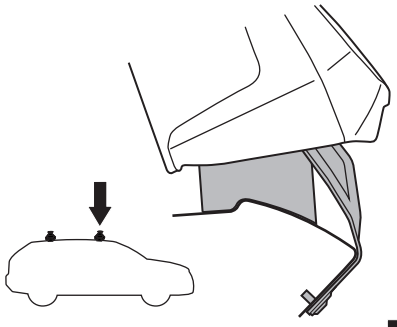





Thule Sweden AB, Borggatan 5
335 73 Hillerstorp, SWEDEN
» PART OF THULE GROUP

info@thule.com

www.thule.com

© Thule Group 2018. All rights reserved.

521-5024-03